Production Drill Jig

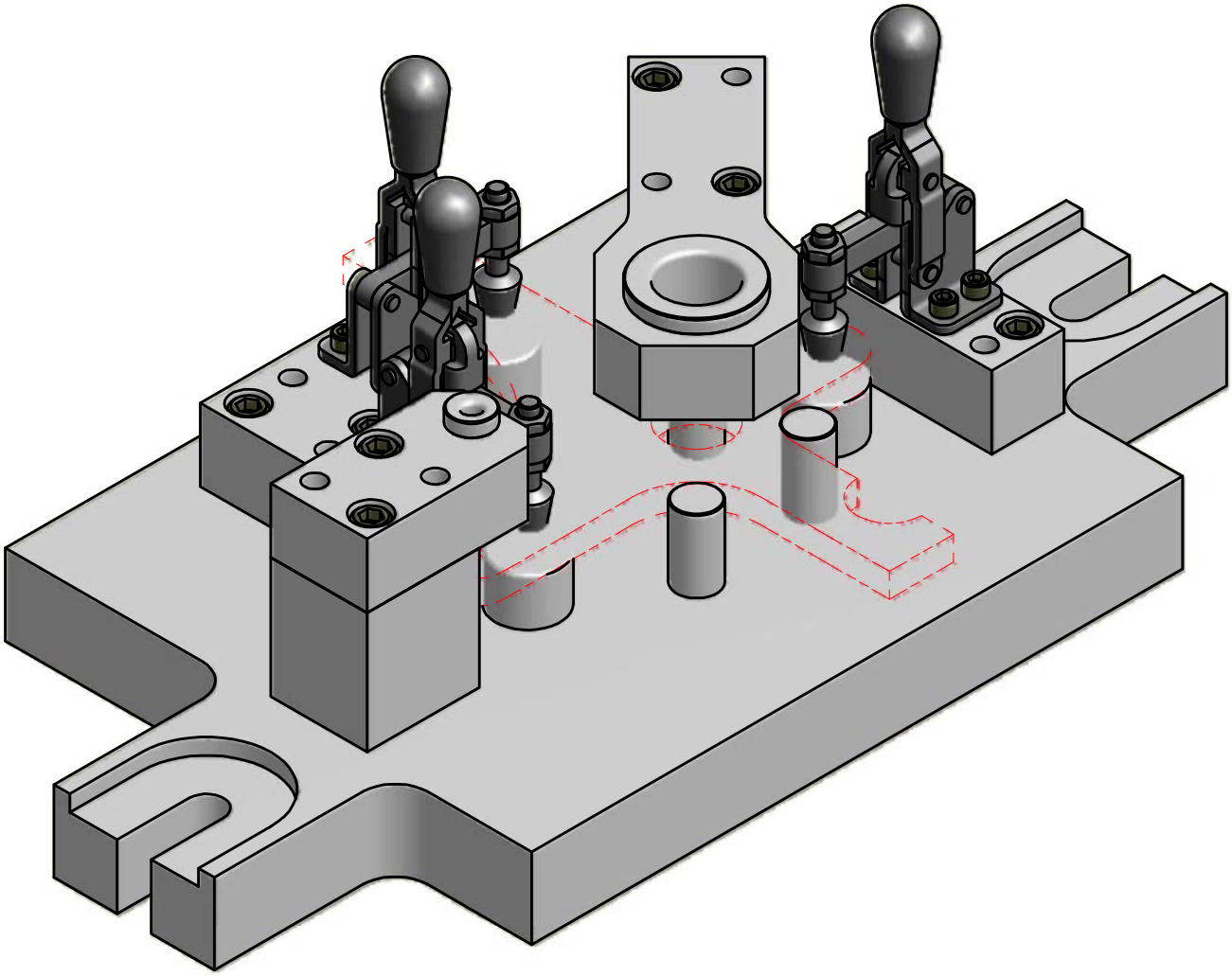

October 8th, 2018

Good Morning:

Welcome to your first day at KC Engineering Inc.

You have been hired to support the Engineering and Design Department. As your Project Engineer I have an urgent job, which needs to be documented. You need to generate documentation and print your final set of working drawings and 3D part assembly drawings so our checking department can review the final details before we start fabricating parts for manufacturing.

Please review all of the information included in this packet to complete the assignment of documenting the ***Production Drill Jig Assembly***. The Production Drill Jig allows for multiple drilling operations in **Part#: A5788-5 (page 7)** for part manufacturing repeatability. The drill jig is equipped with standard components and some pieces that will have to be detailed and fabricated.

See attached exploded pictorial view of the assembly **(page 8)** and its parts list on **(page 9)**. Reference the Machinery's Handbook or equivalent material for the standard components (Dowel Pins, all Screws, Bushings and Rest Buttons) that are used in the drill jig. Reference the Machinery's Handbook for recommended clearances for fits on components.

The Mounting Bracket is placed in the drill jig while setting on the three rest buttons and located by three positioning dowels. The Production Drill Jig Assembly is clamped to a drill press or mill for greater drilling precision. All detailed parts are to be dimensioned with the least amount of tolerance accumulations while maintaining the proper design intent. Reference specification sheets and standards to determine dimensioning & tolerancing.

Remember we need a complete set of drawings ASAP. You determine the CAD software of choice but please document and print your work for a final design review.

If you have any further questions please contact your design engineer.

ASSIGNMENT:

Working from the attached Production Drill Jig Assembly isometric pictorial sketches, bill of materials, and reference material along with the Machinery's Handbook for information on the mechanical components used on the Production Drill Jig Assembly, create new detail and assembly drawings that addresses the documentation and design concept requirements.

GENERAL REQUIREMENTS:

Your detailed drawings must include the following:

- Draw on "D" size paper and use your standard Title Block
- Proper ANSI design standards and lineweights are required
- More than one detail may be drawn on a sheet of paper
- Create callouts for each detail indicating: detail #, detail name, # required, material, and any additional specific notes
- Drawings printed only on "B" size paper. (4 Sheets Maximum)

DRAWING ASSEMBLY REQUIREMENTS:

You are to create an assembly drawing of the **Production Drill Jig Assembly** using our company's standard drawing procedures. Please include enough information in the assembly process to maximize efficiency in manufacturing. Please include a 3D Isometric drawing on the assembly which should include a new colored render.

PART DETAILING REQUIREMENTS:

You are to create detailed parts of the **Production Drill Jig Assembly**. Your details should consist of as many orthographic, sectional, and/or auxiliary views that are needed to fully describe the shape and characteristics of each detail. Each detail should include all dimensions and specifications necessary to manufacture that part. To minimize assembly time, all counterbores and clearance holes for socket head cap screws should contain normal fit clearances unless otherwise specified. This production Drill Jig will also use only Hardened Ground Oversize Series dowel pins. Use the Machinery's Handbook or included reference material to determine all other types of fits and clearances.

Detail the following parts in the order given:

1. **Base Plate:** (Reference Isometric View, page 11)
   Determine dowel hole sizes, drill sizes and threads. All dowel pin holes must have an FN 2 fit tolerance. All Rest Button holes must have an FN 1 fit tolerance.
   Material: 4140 – HRC: 28 – 32
   Finish: Black Oxide – 32 Finish
   Scale: as needed
   Note: Do not include an isometric view on detail sheet

2. **Large Bushing Block:** (Reference Isometric View, page 12)
   Determine clearance holes for the socket head cap screws. Determine all dimensional locations from the Large Bushing Plate as a reference. All dowel pin holes must have an FN 2 fit tolerance.
   Material: 4140 – HRC: 28 – 32
   Finish: Black Oxide – 32 Finish
   Scale: as needed
   Note: Do not include an isometric view on detail sheet

3. **Small Bushing Block:** (Reference Isometric View, page 14)
   Determine clearance holes for the socket head cap screws. Determine all dimensional locations from the Small Bushing Plate as a reference. All dowel pin holes must have an FN 2 fit tolerance.
   Material: 4140 – HRC: 28 – 32
   Finish: Black Oxide – 32 Finish
   Note: Do not include an isometric view on detail sheet

4. **Clamp Block #2:** (Reference Isometric View, page 13)
   Determine clearance holes and counterbore sizes for the socket head cap screws. All dowel pin holes must have an FN 2 fit tolerance. Determine the correct thread size, location and depth of thread for the DE-STA-CO Clamps.
   Material: 4140 – HRC: 28 – 32
   Finish: Black Oxide – 32 Finish
   Scale: as needed
   Note: Include an isometric view on detail sheet

5. **Clamp Block #1:** (Reference Isometric View, page 13)
   Determine clearance holes and counterbore sizes for the socket head cap screws. All dowel pin holes must have an FN 2 fit tolerance. Determine the position, correct thread size, location and depth of thread for the DE-STA-CO Clamp.
   Material: 4140 – HRC: 28 – 32
   Finish: Black Oxide – 32 Finish
   Scale: as needed
   Note: Do not include an isometric view on detail sheet

6. **Large Bushing Plate:** (Reference Isometric View, page 12)
   Determine clearance holes and counterbore sizes for the socket head cap screws. Also determine the location of the large drill bushing. All dowel pin holes must have an FN 2 fit tolerance. The large drill bushing must have an FN 1 fit tolerance.
   Material: 4140 – HRC: 28 – 32
   Finish: Black Oxide – 32 Finish
   Scale: as needed
   Note: Include an isometric view on detail sheet

7. **Small Bushing Plate:** (Reference Isometric View, page 14)
   Determine clearance holes and counterbores for the socket head cap screws. Also determine the location of the small drill bushing. All dowel pin holes must have an FN 2 fit tolerance. The small drill bushing must have an FN 1 fit tolerance.
   Material: 4140 – HRC: 28 – 32
   Finish: Black Oxide – 32 Finish
   Scale: as needed
   Note: Do not include an isometric view on detail sheet

GENERAL NOTES & TOLERANCES

All dimensions must be stated in decimal form. Critical dimensions (those involving locations, machining operations or finish surfaces) will be stated as three place or four place decimals with a general tolerance of ± .005 inch or ±.0005 inch. None-critical dimensions (those involving unfinished surfaces or reference dimensions) should be stated as two place decimals with a general tolerance of ± .01 inch. All holes and mating surfaces are to be fully dimensioned. Angular tolerance of ± 1°.

The following notes and tolerances shall be displayed on all detail and assembly drawings sheets: (Unless Otherwise Specified)

- Drawing Prepared in Accordance w/MIL-STD-100
- Dimensioning and Symbols per ASME Y14.5 – 1994
- All External Surfaces Shall Be Free of Scratches, Dents, or Flaws
- Deburr All Sharp Edges and Burrs
- Break edges .03 Max
- Unless otherwise specified the following tolerances apply:
    - **XX =** ± .01
    - **XXX =** ±.005
    - **XXXX=** ±.0005
    - **ANGLES =** ±1°

STANDARD COMPONENTS (See attached Specification Sheets)

- DE-STA-CO Clamps
- Dowel Pins
- Socket Head Cap Screws
- Rest Buttons
- Drill Bushings

PLOTTING INSTRUCTIONS:

- Plot drawings on “B” size paper only (4 sheets maximum)
- *Note: Ask design coordinator for plotting HELP if needed*

SPECIAL NOTE:

- Your primary objective to complete this drawing in a timely and professional manner. Your drawings will be reviewed on layout and presentation, dimensioning practices and spacing as well as the ability to manufacture the details from the dimensions you have provided.
- ***Save*** your work every 5 to 10 minutes.

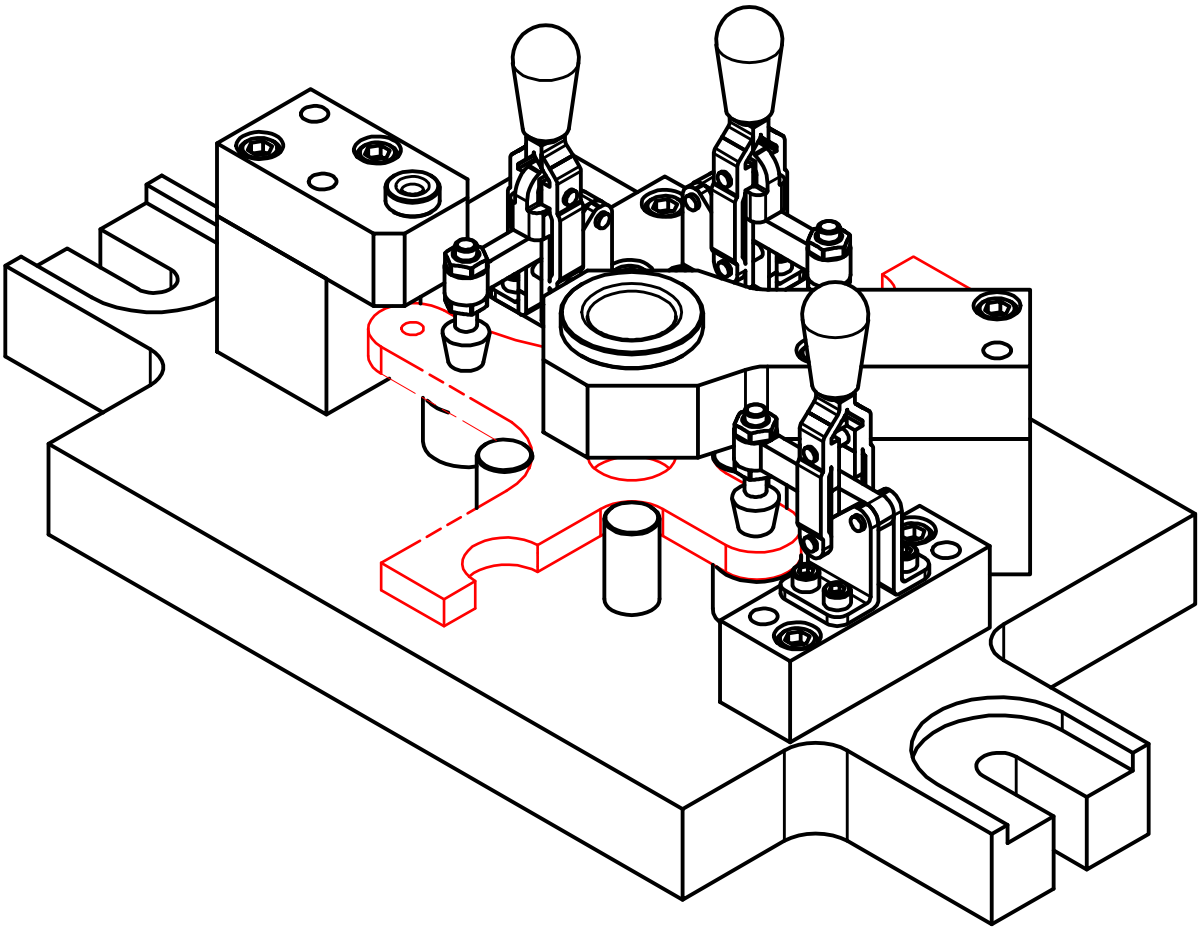

PICTORIAL VIEW #1

PRODUCTION DRILL JIG ASSEMBLY

MOUNTING BRACKET IN POSITION

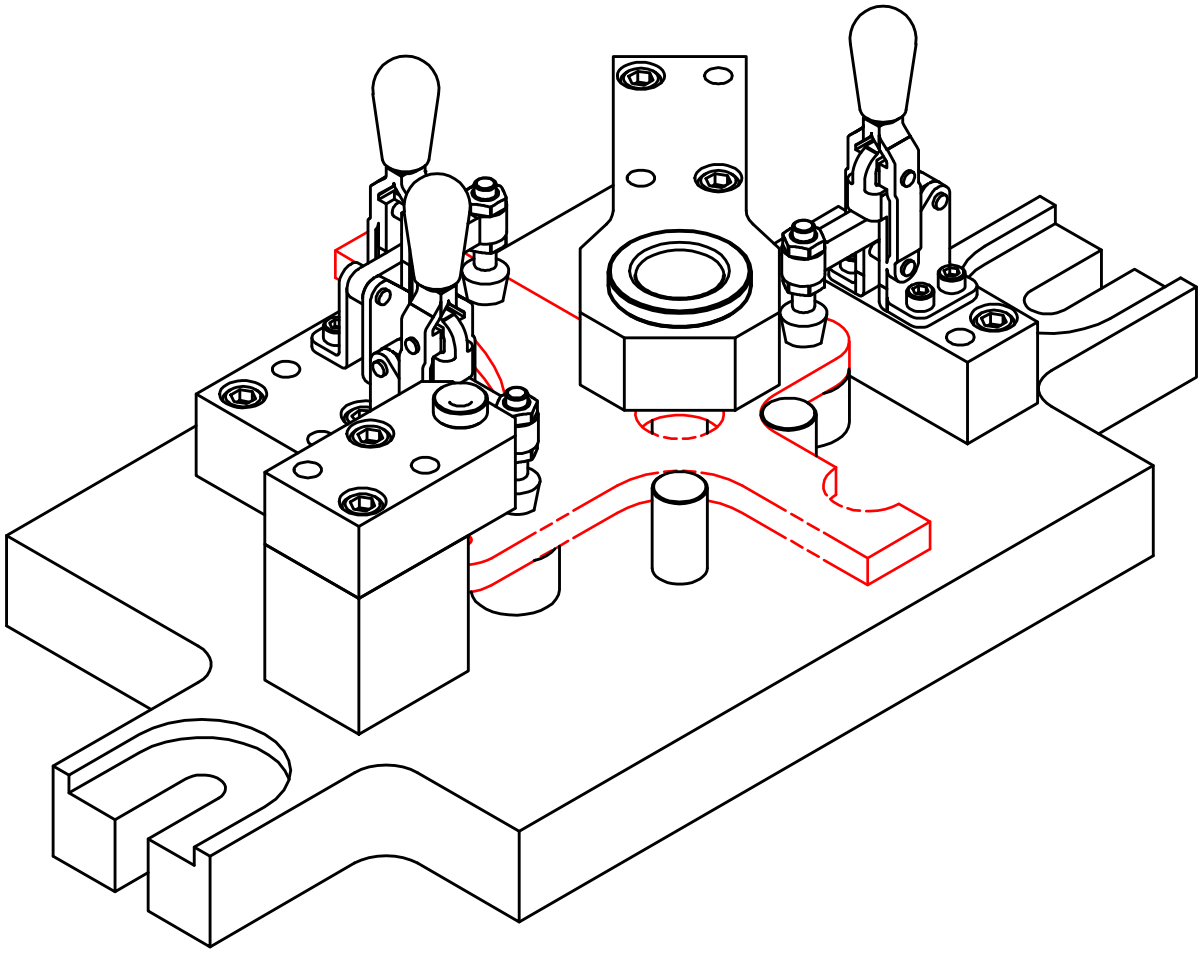

PICTORIAL VIEW #2

PRODUCTION DRILL JIG ASSEMBLY

MOUNTING BRACKET IN POSITION

KC Engineering Inc., 1301 W. 13th Street, Kansas City, MO 64105

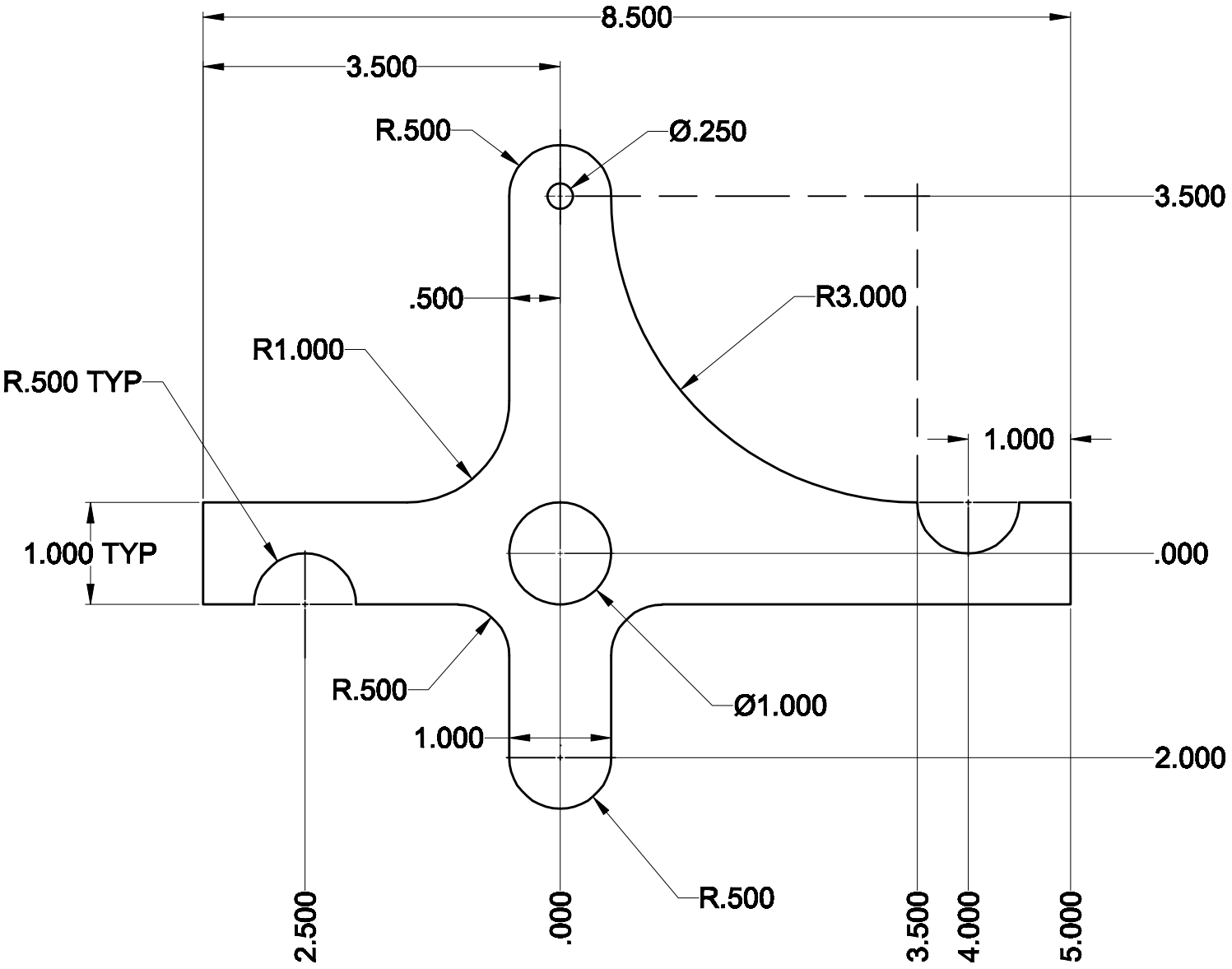

A PART: MOUNTING BRACKET
MAT'L: ALUMINUM
PART#: A5788-5
PART THICKNESS: .375

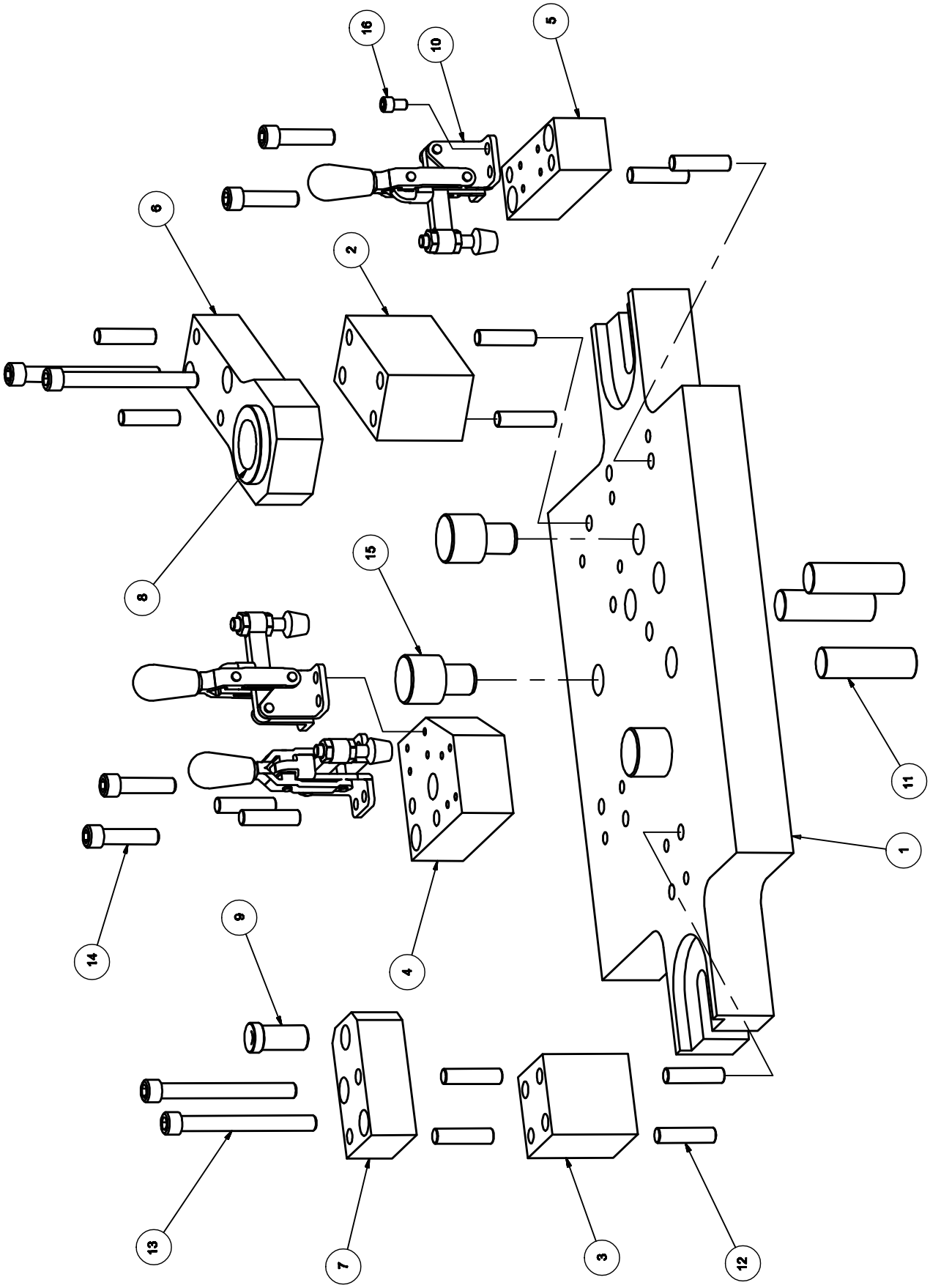

EXPLODED PICTORIAL VIEW

PRODUCTION DRILL JIG ASSEMBLY

MOUNTING BRACKET IN POSITION

KC Engineering Inc., 1301 W. 13th Street, Kansas City, MO

PARTS LIST

PL-2007-001	REVISION A	SHEETS 1 OF 1	DATE 4/28/07	DRAWING NO. D2007

TITLE

PRODUCTION DRILL JIG ASSEMBLY

ITEM NO.	PART OR IDENTIFYING NO.	DRAWING SIZE	DESCRIPTION OR NOMENCLATURE	MATERIAL SPECIFICATION / MANUFACTURE	QTY
1			BASE PLATE - 1.250 x 8.250 x 16.000	4140 - HRC 28-32	1
2			LARGE BUSHING BLOCK - 1.500 x 1.875 x 2.250	4140 - HRC 28-32	1
3			SMALL BUSHING BLOCK - 1.500 x 1.750 x 1.875	4140 - HRC 28-32	1
4			CLAMP BLOCK #2 - 1.125 x 2.625 x 3.125	4140 - HRC 28-32	1
5			CLAMP BLOCK #1 - 1.125 x 1.125 x 3.250	4140 - HRC 28-32	1
6			LARGE BUSHING PLATE - 1.000 x 2.250 x 5.500	4140 - HRC 28-32	1
7			SMALL BUSHING PLATE - 1.000 x 1.500 x 2.750	4140 - HRC 28-32	1
8	H-88-16 x 1.000		DRILL BUSHING	CARR LANE	1
9	H-32-16 x 1.000		DRILL BUSHING	CARR LANE	1
10	CL-250-VTC		DE-STA-CO TOGGLE CLAMP	CARR LANE	3
11			DOWEL - Ø.625 x 2.000 LG	STANDARD	3
12			DOWEL - Ø.313 x 1.250 LG	STANDARD	12
13			SHCS - 5/16 - 18UNC x 3.000 LG	STANDARD	4
14			SHCS - 5/16 - 18UNC x 1.250 LG	STANDARD	4
15	CL-18-RB x .750		REST BUTTON	CARR LANE	3
16			SHCS - #10 - 24UNC x .375	STANDARD	12
	A5788-5	A	MOUNTING BRACKET	ALUMINUM	REF

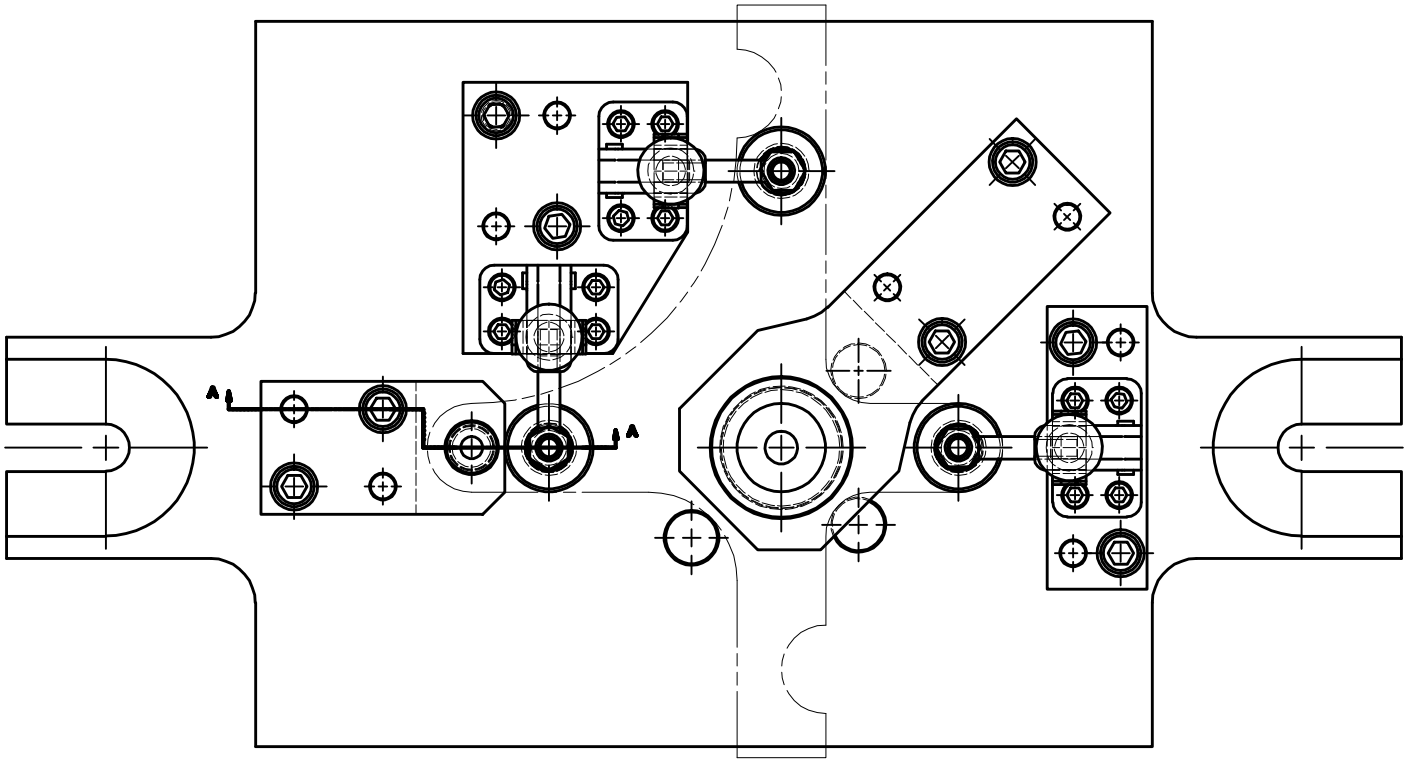

TOP VIEW

PRODUCTION DRILL JIG ASSEMBLY

MOUNTING BRACKET IN POSITION

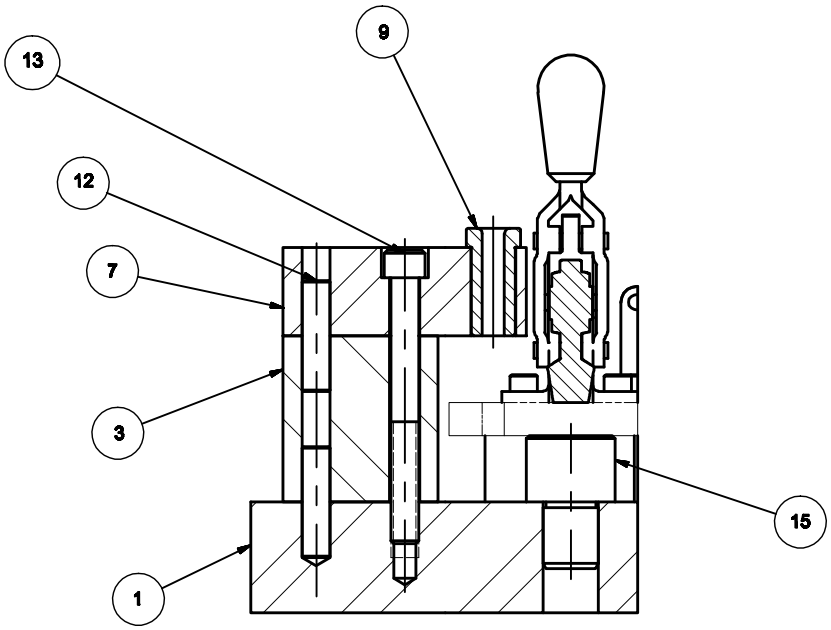

SECTION A-A

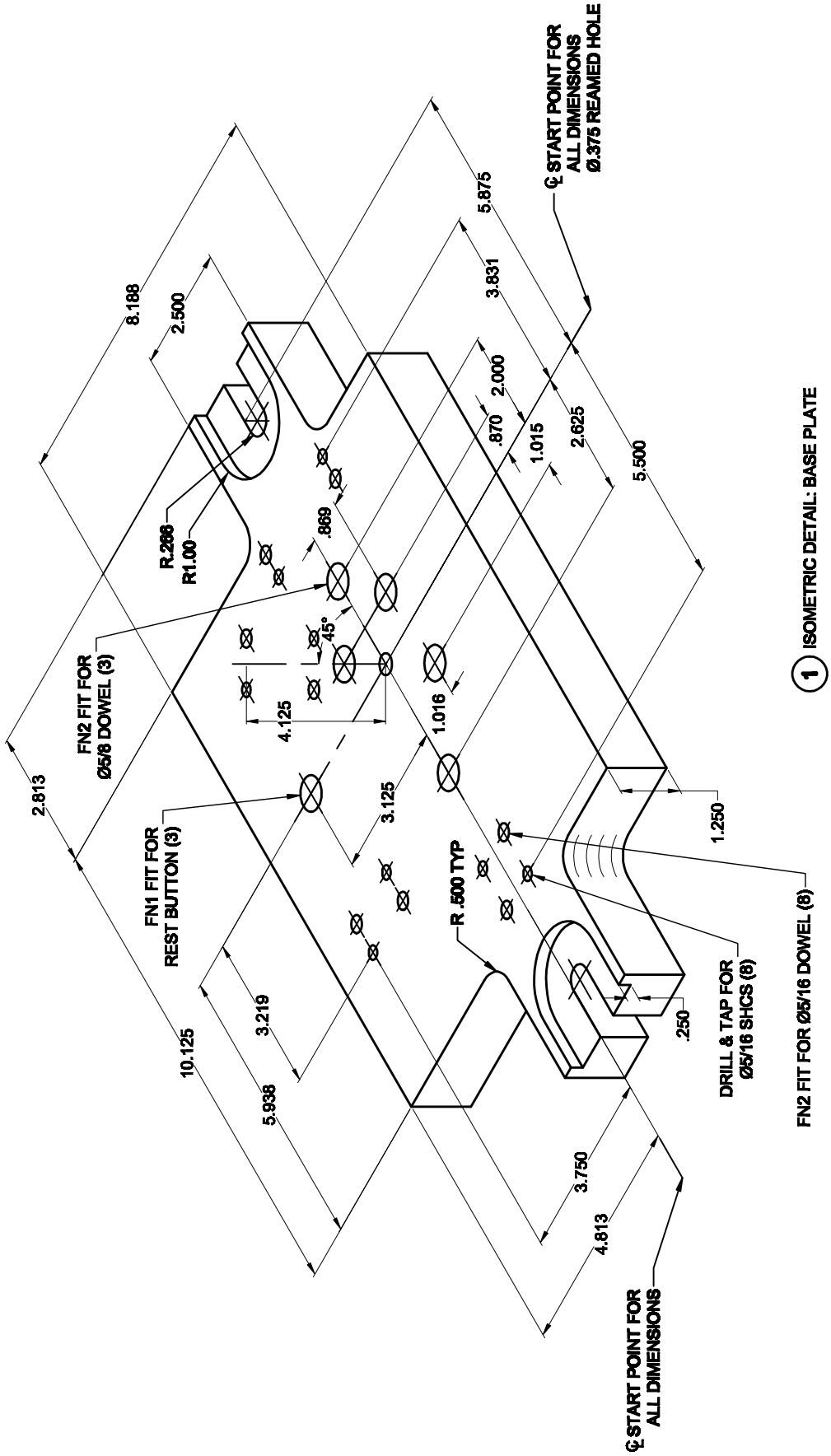
8.188
2.500
2.813
10.125
5.938
3.219
FN1 FIT FOR
REST BUTTON (3)
FN2 FIT FOR
Ø5/8 DOWEL (3)
R.266
R1.00
4.125
.869
45°
3.125
1.016
R .500 TYP
5.875
3.831
2.000
.870
1.015
2.625
5.500
1.250
.250
3.750
4.813
℄ START POINT FOR
ALL DIMENSIONS
℄ START POINT FOR
ALL DIMENSIONS
Ø.375 REAMED HOLE
DRILL & TAP FOR
Ø5/16 SHCS (8)
FN2 FIT FOR Ø5/16 DOWEL (8)
1 ISOMETRIC DETAIL: BASE PLATE

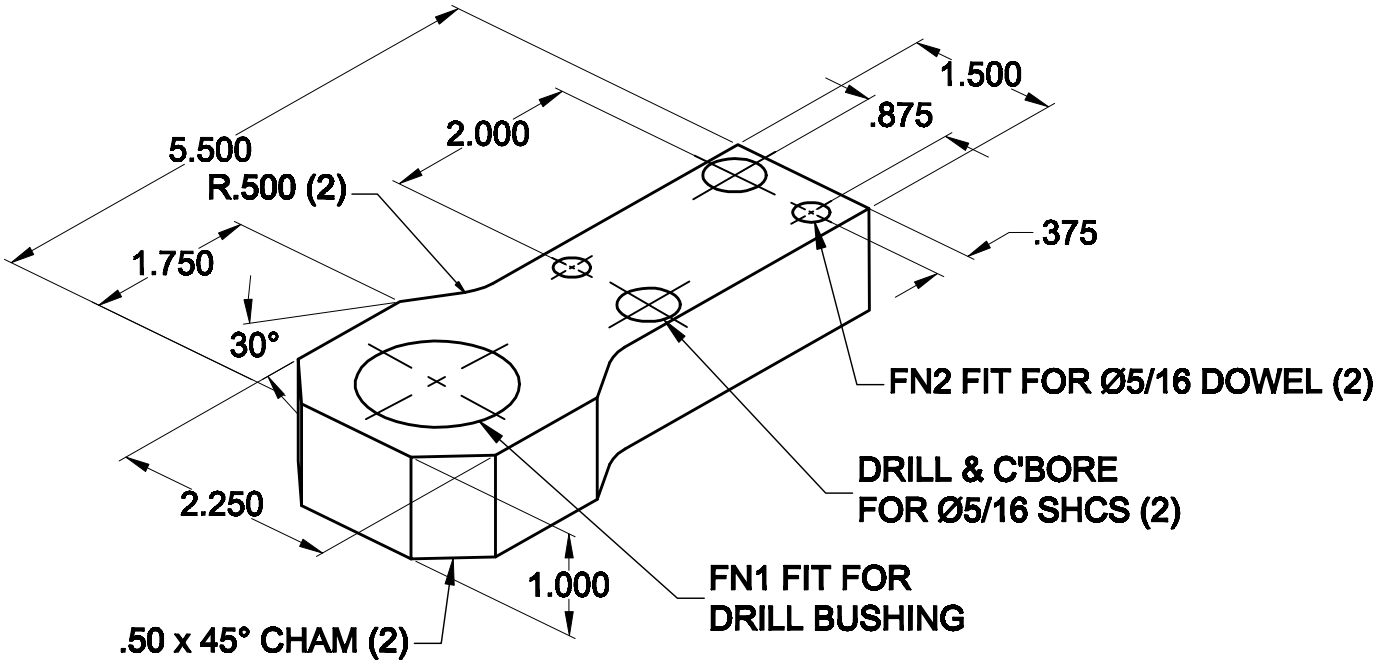

6 ISOMETRIC DETAIL: LARGE BUSHING PLATE

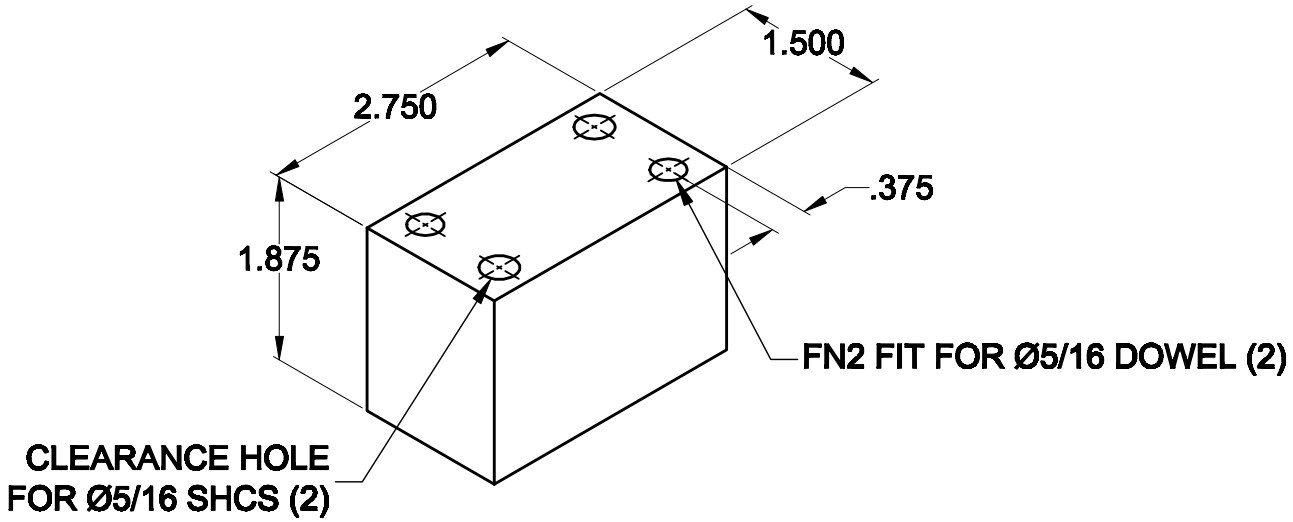

2 ISOMETRIC DETAIL: LARGE BUSHING BLOCK

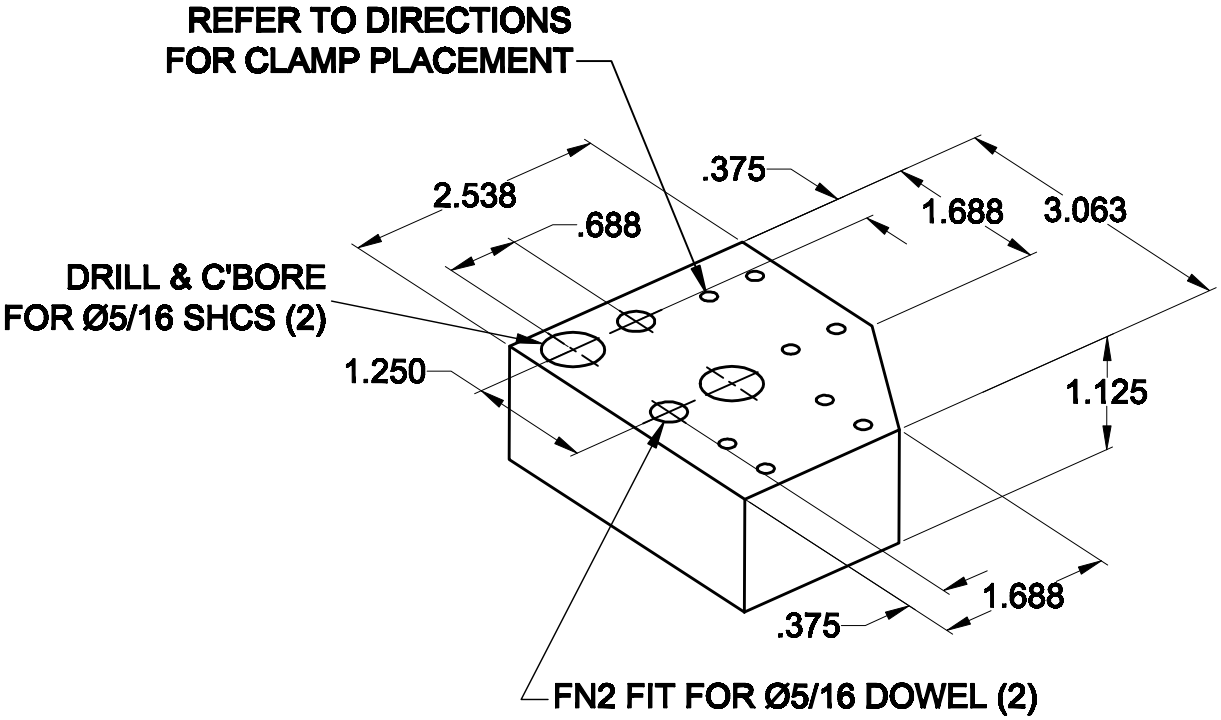

4 ISOMETRIC DETAIL: CLAMP BLOCK #2

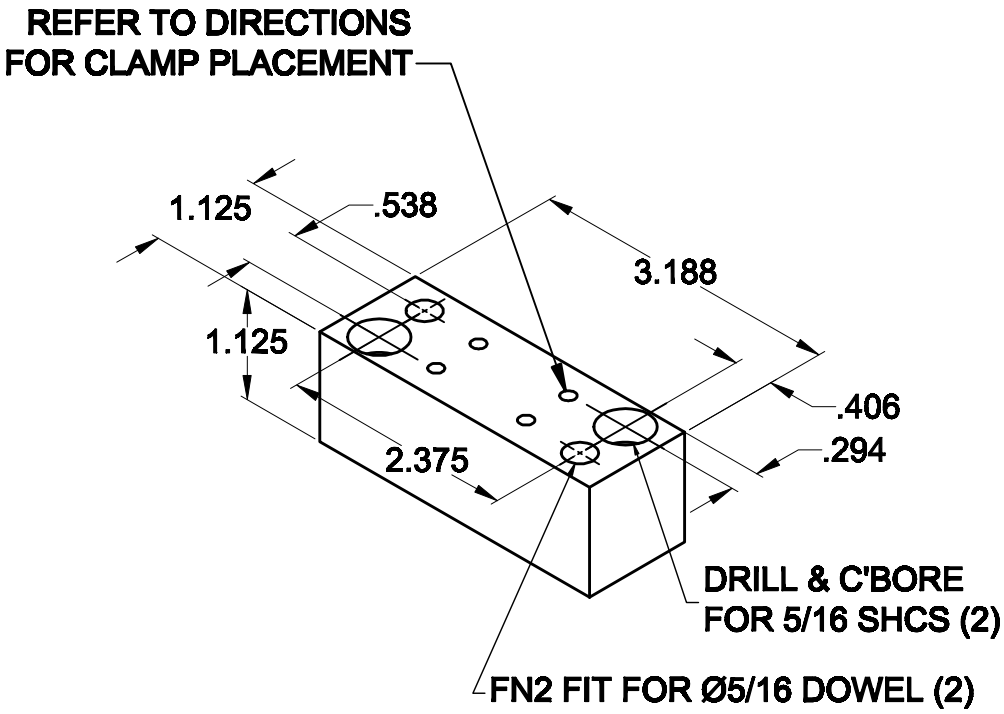

5 ISOMETRIC DETAIL: CLAMP BLOCK #1

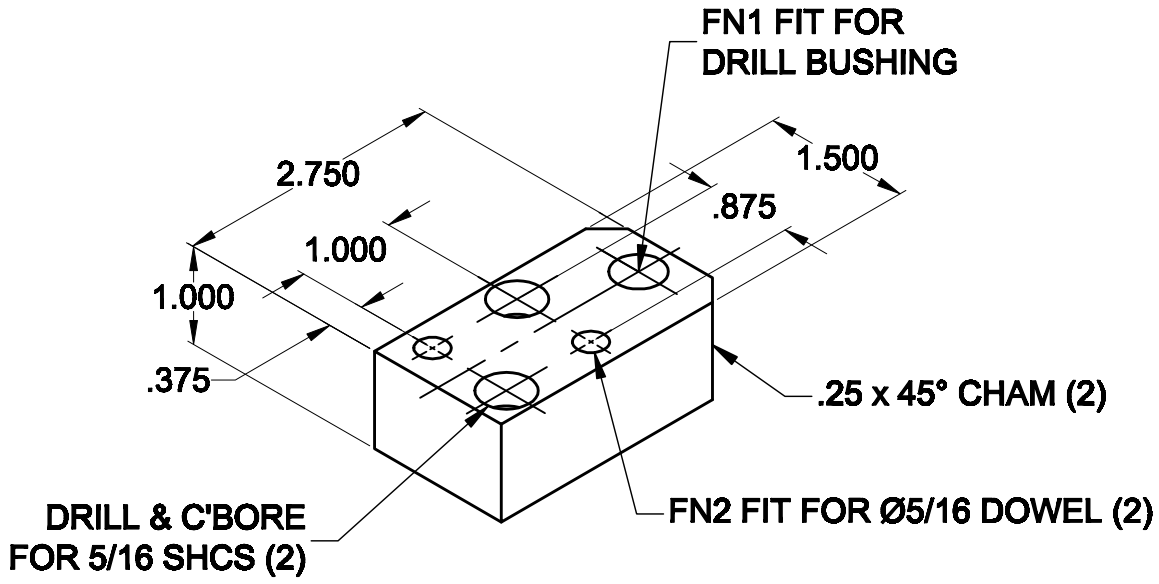

7 ISOMETRIC DETAIL: SMALL BUSHING PLATE

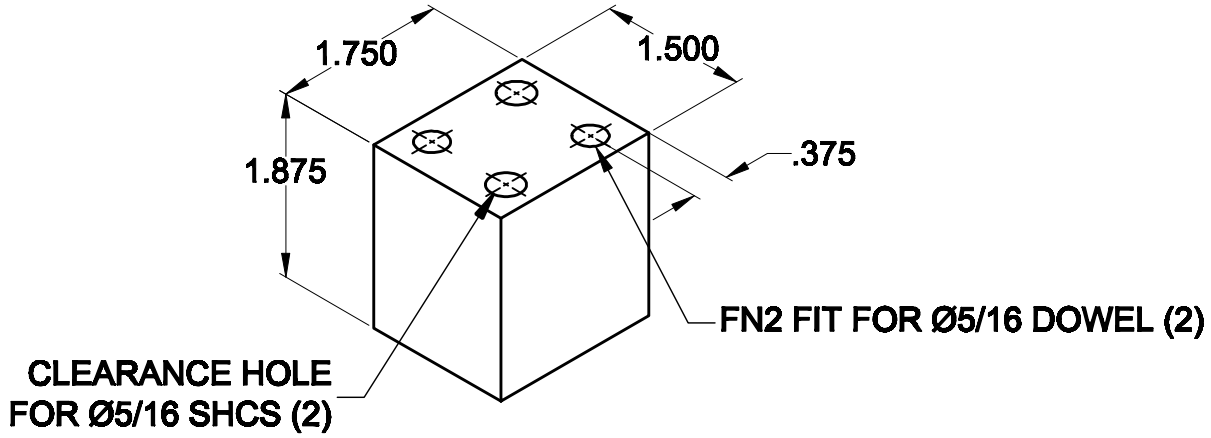

3 ISOMETRIC DETAIL: SMALL BUSHING BLOCK

Tap Drill and Drill Size Chart

USA DRILL SIZES

Drill	Decimal	Drill	Decimal	Drill	Decimal
80	.0135	9/64	.1406	23/64	.3594
79	.0145	27	.1440	U	.3680
1/64	.0156	26	.1470	**3/8**	**.3750**
78	.0160	25	.1495	V	.3770
77	.0180	24	.1520	W	.3860
76	.0200	23	.1540	25/64	.3906
75	.0210	5/32	.1562	X	.3970
74	.0225	22	.1570	Y	.4040
73	.0240	21	.1590	13/32	.4062
72	.0250	20	.1610	Z	.4130
71	.0260	19	.1660	27/64	.4219
70	.0280	18	.1695	**7/16**	**.4375**
69	.0292	11/64	.1719	29/64	.4531
68	.0310	17	.1730	15/32	.4688
1/32	.0312	16	.1770	31/64	.4844
67	.0320	15	.1800	**1/2**	**.5000**
66	.0330	14	.1820	33/64	.5156
65	.0350	13	.1850	17/32	.5312
64	.0360	**3/16**	**.1875**	35/64	.5469
63	.0370	12	.1890	**9/16**	**.5625**
62	.0380	11	.1910	37/64	.5781
61	.0390	10	.1935	19/32	.5938
60	.0400	9	.1960	39/64	.6094
59	.0410	8	.1990	**5/8**	**.6250**
58	.0420	7	.2010	41/64	.6406
57	.0430	13/64	.2031	21/32	.6562
56	.0465	6	.2040	43/64	.6719
3/64	.0469	5	.2055	**11/16**	**.6875**
55	.0520	4	.2090	45/64	.7031
54	.0550	3	.2130	23/32	.7188
53	.0595	7/32	.2188	47/64	.7344
1/16	**.0625**	2	.2210	**3/4**	**.7500**
52	.0635	1	.2280	49/64	.7656
51	.0670	A	.2340	25/32	.7812
50	.0700	15/64	.2344	51/64	.7969
49	.0730	B	.2380	**13/16**	**.8125**
48	.0760	C	.2420	53/64	.8281
5/64	.0781	D	.2460	27/32	.8438
47	.0785	E	.2500	55/64	.8594
46	.0810	**1/4**	**.2500**	**7/8**	**.8750**
45	.0820	F	.2570	57/64	.8906
44	.0860	G	.2610	29/32	.9062
43	.0890	17/64	.2656	59/64	.9219
42	.0935	H	.2660	**15/16**	**.9375**
3/32	.0938	I	.2720	61/64	.9531
41	.0960	J	.2770	31/32	.9688
40	.0980	K	.2810	63/64	.9844
39	.0995	9/32	.2812	**1**	**1.0000**
38	.1015	L	.2900		
37	.1040	M	.2950	+64th	
36	.1065	19/64	.2969	increments up	
7/64	.1094	N	.3020	to 1-7/8"	
35	.1100	**5/16**	**.3125**		
34	.1110	O	.3160	+32nd	
33	.1130	P	.3230	increments up	
32	.1160	21/64	.3281	to 2-1/4"	
31	.1200	Q	.3320		
1/8	**.1250**	R	.3390	+16th	
30	.1285	11/32	.3438	increments up	
29	.1360	S	.3480	to 4-1/4"	
28	.1405	T	.3580		

METRIC DRILL SIZES

Drill	Decimal	Drill	Decimal	Drill	Decimal
.35mm	.0138	3.60mm	.1417	8.70mm	.3425
.38mm	.0150	3.70mm	.1457	8.75mm	.3445
.40mm	.0157	3.75mm	.1476	8.80mm	.3465
.42mm	.0165	3.80mm	.1496	8.90mm	.3504
.45mm	.0177	3.90mm	.1535	**9.00mm**	**.3543**
.48mm	.0189	**4.00mm**	**.1575**	9.10mm	.3583
.50mm	.0197	4.10mm	.1614	9.20mm	.3622
.55mm	.0217	4.20mm	.1654	9.25mm	.3642
.60mm	.0236	4.25mm	.1673	9.30mm	.3661
.65mm	.0256	4.30mm	.1693	9.40mm	.3701
.70mm	.0276	4.40mm	.1732	9.50mm	.3740
.75mm	.0295	4.50mm	.1772	9.60mm	.3780
.80mm	.0315	4.60mm	.1811	9.70mm	.3819
.85mm	.0335	4.70mm	.1850	9.75mm	.3839
.90mm	.0354	4.75mm	.1870	9.80mm	.3858
.95mm	.0374	4.80mm	.1890	9.90mm	.3898
1.00mm	**.0394**	4.90mm	.1929	**10.00mm**	**.3937**
1.05mm	.0413	**5.00mm**	**.1969**	10.20mm	.4016
1.10mm	.0433	5.10mm	.2008	10.50mm	.4134
1.15mm	.0453	5.20mm	.2047	10.80mm	.4252
1.20mm	.0472	5.25mm	.2067	**11.00mm**	**.4331**
1.25mm	.0492	5.30mm	.2087	11.20mm	.4409
1.30mm	.0512	5.40mm	.2126	11.50mm	.4528
1.35mm	.0531	5.50mm	.2165	11.80mm	.4646
1.40mm	.0551	5.60mm	.2205	**12.00mm**	**.4724**
1.45mm	.0571	5.70mm	.2244	12.20mm	.4803
1.50mm	.0591	5.75mm	.2264	12.50mm	.4921
1.55mm	.0610	5.80mm	.2283	**13.00mm**	**.5118**
1.60mm	.0630	5.90mm	.2323	13.50mm	.5315
1.65mm	.0650	**6.00mm**	**.2362**	**14.00mm**	**.5512**
1.70mm	.0669	6.10mm	.2402	14.50mm	.5709
1.75mm	.0689	6.20mm	.2441	**15.00mm**	**.5906**
1.80mm	.0709	6.25mm	.2461	15.50mm	.6102
1.85mm	.0728	6.30mm	.2480	**16.00mm**	**.6299**
1.90mm	.0748	6.40mm	.2520	16.50mm	.6496
1.95mm	.0768	6.50mm	.2559	**17.00mm**	**.6693**
2.00mm	**.0787**	6.60mm	.2598	17.50mm	.6890
2.05mm	.0807	6.70mm	.2638	**18.00mm**	**.7087**
2.10mm	.0827	6.75mm	.2657	18.50mm	.7283
2.15mm	.0846	6.80mm	.2677	**19.00mm**	**.7480**
2.20mm	.0866	6.90mm	.2717	19.50mm	.7677
2.25mm	.0886	**7.00mm**	**.2756**	**20.00mm**	**.7874**
2.30mm	.0906	7.10mm	.2795	20.50mm	.8071
2.35mm	.0925	7.20mm	.2835	**21.00mm**	**.8268**
2.40mm	.0945	7.25mm	.2854	21.50mm	.8465
2.45mm	.0965	7.30mm	.2874	**22.00mm**	**.8661**
2.50mm	.0984	7.40mm	.2913	22.50mm	.8858
2.55mm	.1004	7.50mm	.2953	**23.00mm**	**.9055**
2.60mm	.1024	7.60mm	.2992	23.50mm	.9252
2.65mm	.1043	7.70mm	.3031	**24.00mm**	**.9449**
2.70mm	.1063	7.75mm	.3051	24.50mm	.9646
2.75mm	.1083	7.80mm	.3071	**25.00mm**	**.9843**
2.80mm	.1102	7.90mm	.3110		
2.90mm	.1142	**8.00mm**	**.3150**	+1.00mm	
3.00mm	**.1181**	8.10mm	.3189	increments	
3.10mm	.1220	8.20mm	.3228	up to 48mm	
3.20mm	.1260	8.25mm	.3248		
3.25mm	.1280	8.30mm	.3268	+5.00mm	
3.30mm	.1299	8.40mm	.3307	increments	
3.40mm	.1339	8.50mm	.3346	from 50mm	
3.50mm	.1378	8.60mm	.3386	up to 105mm	

TAP GUIDE SIZES
(Priced as specials)

Tap Size*	Tap Guide Nominal ID Size	Tap Drill Size**
#0-80	.0616	3/64
#2-56	.0883	#50
#2-64	.0880	#50
#4-40	.1152	#43
#4-48	.1147	#42
#5-40	.1282	#38
#5-44	1280 (3.25mm)	#37
#6-32	.1421	#36
#6-40	.1412	#33
#8-32	.1681	#29
#8-36	.1676	#29
#10-24	.1954	#25
#10-32	.1941	#21
1/4-20	.2565	#7
1/4-28	.2546	#3
5/16-18	.3197	F
5/16-24	.3179	I
3/8-16	.3831	5/16
3/8-24	.3804	Q
7/16-14	.4468	U
7/16-20	.4440	25/64
1/2-13	.5100	27/64
1/2-20	.5065	29/64
9/16-12	.5733	31/64
9/16-18	.5697	33/64
5/8-11	.6368	17/32
5/8-18	.6322	37/64
3/4-10	.7630	21/32
3/4-16	.7581	11/16
7/8-9	.8894	49/64
7/8-14	.8843	13/16
1-8	1.0162	7/8
1-14	1.0093	15/16
METRIC		
M1.6x0.35	.0651	1.25mm or #55
M2x0.4	.0810 (#46)	1.60mm or #52
M2.5x0.45	.1008	2.05mm or #46
M3x0.5	.1207	2.50mm or #39
M3.5x0.6	.1407	2.90mm or #32
M4x0.7	.1613	3.30mm or #30
M5x0.8	.2010 (#7)	4.20mm or #19
M6x1	.2410	5.00mm or #8
M8x1.25	.3214	6.80mm or H
M8x1	.3197	7.00mm or J
M10x1.5	.4009	8.50mm or R
M10x1.25	.4002	8.80mm or 11/32
M12x1.75	.4805	10.20mm or 13/32
M12x1.25	.4789	10.80mm or 27/64
M14x2	.5600	12.00mm or 15/32
M14x1.5	.5584	12.50mm or 1/2
M16x2	.6387	14.00mm or 35/64
M16x1.5	.6372	14.50mm or 37/64
M18x2.5	.7191	15.50mm or 39/64
M18x1.5	.7159	16.50mm or 21/32
M20x2.5	.7998	17.50mm or 11/16
M20x1.5	.7946	18.50mm or 47/64
M22x2.5	.8765	19.50mm or 49/64
M22x1.5	.8734	20.50mm or 13/16
M24x3	.9583	21.00mm or 53/64
M24x2	.9537	22.00mm or 7/8

* Coarse series shown in bold. Pitch callout not required on metric coarse series.
** Closest size for 75% theoretical thread.

Carr Lane®
MANUFACTURING CO.
4200 Carr Lane Ct., P.O. Box 191970
St. Louis, Missouri 63119-7970 USA
Phone: 314-647-6200, FAX: 314-647-5736
Web Site: www.carrlane.com

Standard Components

- Cap Screws
- Dowel Pins

Table 4. American National Standard Hexagon and Spline Socket Head Cap Screws *ANSI/ASME B18.3-1998*

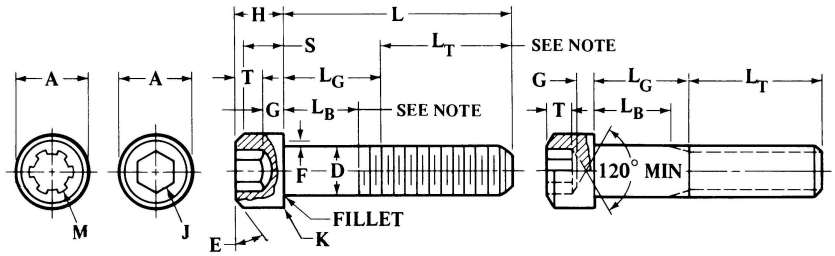

Nominal Size	Body Diameter, Max	Body Diameter, Min	Head Diameter, Max	Head Diameter, Min	Head Height, Max	Head Height, Min	Spline Socket Size Nom	Hex. Socket Size Nom		Fillet Ext. Max	Key Engagement[a]
	D		*A*		*H*		*M*	*J*		*F*	*T*
0	0.0600	0.0568	0.096	0.091	0.060	0.057	0.060	0.050		0.007	0.025
1	0.0730	0.0695	0.118	0.112	0.073	0.070	0.072	1/16	0.062	0.007	0.031
2	0.0860	0.0822	0.140	0.134	0.086	0.083	0.096	5/64	0.078	0.008	0.038
3	0.0990	0.0949	0.161	0.154	0.099	0.095	0.096	5/64	0.078	0.008	0.044
4	0.1120	0.1075	0.183	0.176	0.112	0.108	0.111	3/32	0.094	0.009	0.051
5	0.1250	0.1202	0.205	0.198	0.125	0.121	0.111	3/32	0.094	0.010	0.057
6	0.1380	0.1329	0.226	0.218	0.138	0.134	0.133	7/64	0.109	0.010	0.064
8	0.1640	0.1585	0.270	0.262	0.164	0.159	0.168	9/64	0.141	0.012	0.077
10	0.1900	0.1840	0.312	0.303	0.190	0.185	0.183	5/32	0.156	0.014	0.090
1/4	0.2500	0.2435	0.375	0.365	0.250	0.244	0.216	3/16	0.188	0.014	0.120
5/16	0.3125	0.3053	0.469	0.457	0.312	0.306	0.291	1/4	0.250	0.017	0.151
3/8	0.3750	0.3678	0.562	0.550	0.375	0.368	0.372	5/16	0.312	0.020	0.182
7/16	0.4375	0.4294	0.656	0.642	0.438	0.430	0.454	3/8	0.375	0.023	0.213
1/2	0.5000	0.4919	0.750	0.735	0.500	0.492	0.454	3/8	0.375	0.026	0.245
5/8	0.6250	0.6163	0.938	0.921	0.625	0.616	0.595	1/2	0.500	0.032	0.307
3/4	0.7500	0.7406	1.125	1.107	0.750	0.740	0.620	5/8	0.625	0.039	0.370
7/8	0.8750	0.8647	1.312	1.293	0.875	0.864	0.698	3/4	0.750	0.044	0.432
1	1.0000	0.9886	1.500	1.479	1.000	0.988	0.790	3/4	0.750	0.050	0.495
1 1/8	1.1250	1.1086	1.688	1.665	1.125	1.111	...	7/8	0.875	0.055	0.557
1 1/4	1.2500	1.2336	1.875	1.852	1.250	1.236	...	7/8	0.875	0.060	0.620
1 3/8	1.3750	1.3568	2.062	2.038	1.375	1.360	...	1	1.000	0.065	0.682
1 1/2	1.5000	1.4818	2.250	2.224	1.500	1.485	...	1	1.000	0.070	0.745
1 3/4	1.7500	1.7295	2.625	2.597	1.750	1.734	...	1 1/4	1.250	0.080	0.870
2	2.0000	1.9780	3.000	2.970	2.000	1.983	...	1 1/2	1.500	0.090	0.995
2 1/4	2.2500	2.2280	3.375	3.344	2.250	2.232	...	1 3/4	1.750	0.100	1.120
2 1/2	2.5000	2.4762	3.750	3.717	2.500	2.481	...	1 3/4	1.750	0.110	1.245
2 3/4	2.7500	2.7262	4.125	4.090	2.750	2.730	...	2	2.000	0.120	1.370
3	3.0000	2.9762	4.500	4.464	3.000	2.979	...	2 1/4	2.250	0.130	1.495
3 1/4	3.2500	3.2262	4.875	4.837	3.250	3.228	...	2 1/4	2.250	0.140	1.620
3 1/2	3.5000	3.4762	5.250	5.211	3.500	3.478	...	2 3/4	2.750	0.150	1.745
3 3/4	3.7500	3.7262	5.625	5.584	3.750	3.727	...	2 3/4	2.750	0.160	1.870
4	4.0000	3.9762	6.000	5.958	4.000	3.976	...	3	3.000	0.170	1.995

[a] (Key engagement depths are minimum.)

All dimensions in inches. The body length L_B of the screw is the length of the unthreaded cylindrical portion of the shank. The length of thread, L_T, is the distance from the extreme point to the last complete (full form) thread. Standard length increments for screw diameters up to 1 inch are 1/16 inch for lengths 1/8 through 1/4 inch, 1/8 inch for lengths 1/4 through 1 inch, 1/4 inch for lengths 1 through 3 1/2 inches, 1/2 inch for lengths 3 1/2 through 7 inches, 1 inch for lengths 7 through 10 inches and for diameters over 1 inch are 1/2 inch for lengths 1 through 7 inches, 1 inch for lengths 7 through 10 inches, and 2 inches for lengths over 10 inches. Heads may be plain or knurled, and chamfered to an angle *E* of 30 to 45 degrees with the surface of the flat. The thread conforms to the Unified Standard with radius root, Class 3A UNRC and UNRF for screw sizes No. 0 through 1 inch inclusive, Class 2A UNRC and UNRF for over 1 inch through 1 1/2 inches inclusive, and Class 2A UNRC for larger sizes. Socket dimensions are given in Table 11. For details not shown, including materials, see ANSI/ASME B18.3-1998.

Table 5. Drill and Counterbore Sizes For Socket Head Cap Screws (1960 Series)

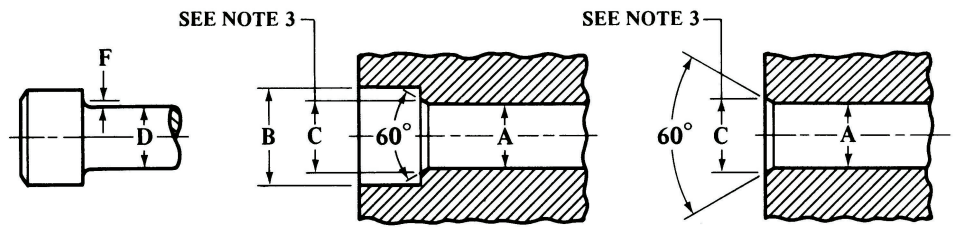

Nominal Size or Basic Screw Diameter		Nominal Drill Size: Close Fit[b] Number or Fractional Size	Close Fit[b] Decimal Size	Normal Fit[c] Number or Fractional Size	Normal Fit[c] Decimal Size	Counterbore Diameter	Countersink Diameter[a]
		A				*B*	*C*
0	0.0600	51	0.067	49	0.073	1/8	0.074
1	0.0730	46	0.081	43	0.089	5/32	0.087
2	0.0860	3/32	0.094	36	0.106	3/16	0.102
3	0.0990	36	0.106	31	0.120	7/32	0.115
4	0.1120	1/8	0.125	29	0.136	7/32	0.130
5	0.1250	9/64	0.141	23	0.154	1/4	0.145
6	0.1380	23	0.154	18	0.170	9/32	0.158
8	0.1640	15	0.180	10	0.194	5/16	0.188
10	0.1900	5	0.206	2	0.221	3/8	0.218
1/4	0.2500	17/64	0.266	9/32	0.281	7/16	0.278
5/16	0.3125	21/64	0.328	11/32	0.344	17/32	0.346
3/8	0.3750	25/64	0.391	13/32	0.406	5/8	0.415
7/16	0.4375	29/64	0.453	15/32	0.469	23/32	0.483
1/2	0.5000	33/64	0.516	17/32	0.531	13/16	0.552
5/8	0.6250	41/64	0.641	21/32	0.656	1	0.689
3/4	0.7500	49/64	0.766	25/32	0.781	1 3/16	0.828
7/8	0.8750	57/64	0.891	29/32	0.906	1 3/8	0.963
1	1.0000	1 1/64	1.016	1 1/32	1.031	1 5/8	1.100
1 1/4	1.2500	1 9/32	1.281	1 5/16	1.312	2	1.370
1 1/2	1.5000	1 17/32	1.531	1 9/16	1.562	2 3/8	1.640
1 3/4	1.7500	1 25/32	1.781	1 13/16	1.812	2 3/4	1.910
2	2.0000	2 1/32	2.031	2 1/16	2.062	3 1/8	2.180

[a] *Countersink:* It is considered good practice to countersink or break the edges of holes which are smaller than (*D* Max + 2*F* Max) in parts having a hardness which approaches, equals or exceeds the screw hardness. If such holes are not countersunk, the heads of screws may not seat properly or the sharp edges on holes may deform the fillets on screws thereby making them susceptible to fatigue in applications involving dynamic loading. The countersink or corner relief, however, should not be larger than is necessary to insure that the fillet on the screw is cleared.

[b] *Close Fit:* The close fit is normally limited to holes for those lengths of screws which are threaded to the head in assemblies where only one screw is to be used or where two or more screws are to be used and the mating holes are to be produced either at assembly or by matched and coordinated tooling.

[c] *Normal Fit:* The normal fit is intended for screws of relatively long length or for assemblies involving two or more screws where the mating holes are to be produced by conventional tolerancing methods. It provides for the maximum allowable eccentricity of the longest standard screws and for certain variations in the parts to be fastened, such as: deviations in hole straightness, angularity between the axis of the tapped hole and that of the hole for the shank, differences in center distances of the mating holes, etc.

All dimensions in inches.

Source: Appendix to American National Standard ANSI/ASME B18.3-1998.

Table 1. American National Standard Hardened Ground Machine Dowel Pins *ANSI/ASME B18.8.2-1995*

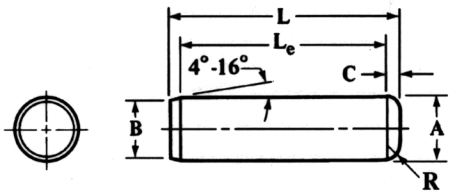

Nominal Size[a] or Nominal Pin Diameter		Pin Diameter, *A*						Point Diameter, *B*		Crown Height, *C*	Crown Radius, *R*	Range of Preferred Lengths,[b] *L*	Single Shear Load, for Carbon or Alloy Steel, Calculated lb	Suggested Hole Diameter[c]	
		Standard Series Pins			Oversize Series Pins										
		Basic	Max	Min	Basic	Max	Min	Max	Min	Max	Min			Max	Min
1/16	0.0625	0.0627	0.0628	0.0626	0.0635	0.0636	0.0634	0.058	0.048	0.020	0.008	3/16–3/4	400	0.0625	0.0620
5/64[d]	0.0781	0.0783	0.0784	0.0782	0.0791	0.0792	0.0790	0.074	0.064	0.026	0.010	...	620	0.0781	0.0776
3/32	0.0938	0.0940	0.0941	0.0939	0.0948	0.0949	0.0947	0.089	0.079	0.031	0.012	5/16–1	900	0.0937	0.0932
1/8	0.1250	0.1252	0.1253	0.1251	0.1260	0.1261	0.1259	0.120	0.110	0.041	0.016	3/8–2	1,600	0.1250	0.1245
5/32[d]	0.1562	0.1564	0.1565	0.1563	0.1572	0.1573	0.1571	0.150	0.140	0.052	0.020	...	2,500	0.1562	0.1557
3/16	0.1875	0.1877	0.1878	0.1876	0.1885	0.1886	0.1884	0.180	0.170	0.062	0.023	1/2–2	3,600	0.1875	0.1870
1/4	0.2500	0.2502	0.2503	0.2501	0.2510	0.2511	0.2509	0.240	0.230	0.083	0.031	1/2–2 1/2	6,400	0.2500	0.2495
5/16	0.3125	0.3127	0.3128	0.3126	0.3135	0.3136	0.3134	0.302	0.290	0.104	0.039	1/2–2 1/2	10,000	0.3125	0.3120
3/8	0.3750	0.3752	0.3753	0.3751	0.3760	0.3761	0.3759	0.365	0.350	0.125	0.047	1/2–3	14,350	0.3750	0.3745
7/16	0.4375	0.4377	0.4378	0.4376	0.4385	0.4386	0.4384	0.424	0.409	0.146	0.055	7/8–3	19,550	0.4375	0.4370
1/2	0.5000	0.5002	0.5003	0.5001	0.5010	0.5011	0.5009	0.486	0.471	0.167	0.063	3/4, 1–4	25,500	0.5000	0.4995
5/8	0.6250	0.6252	0.6253	0.6251	0.6260	0.6261	0.6259	0.611	0.595	0.208	0.078	1 1/4–5	39,900	0.6250	0.6245
3/4	0.7500	0.7502	0.7503	0.7501	0.7510	0.7511	0.7509	0.735	0.715	0.250	0.094	1 1/2–6	57,000	0.7500	0.7495
7/8	0.8750	0.8752	0.8753	0.8751	0.8760	0.8761	0.8759	0.860	0.840	0.293	0.109	2, 2 1/2–6	78,000	0.8750	0.8745
1	1.0000	1.0002	1.0003	1.0001	1.0010	1.0011	1.0009	0.980	0.960	0.333	0.125	2, 2 1/2–5, 6	102,000	1.0000	0.9995

[a] Where specifying nominal size as basic diameter, zeros preceding decimal and in the fourth decimal place are omitted.

[b] Lengths increase in 1/16-inch steps up to 3/8 inch, in 1/8-inch steps from 3/8 inch to 1 inch, in 1/4-inch steps from 1 inch to 2 1/2 inches, and in 1/2-inch steps above 2 1/2 inches. Tolerance on length is ±0.010 inch.

[c] These hole sizes have been commonly used for press fitting Standard Series machine dowel pins into materials such as mild steels and cast iron. In soft materials such as aluminum or zinc die castings, hole size limits are usually decreased by 0.0005 inch to increase the press fit.

[d] Nonpreferred sizes, not recommended for use in new designs.

All dimensions are in inches.

Installation and Technical Data

- Drill Bushings
- Rest Buttons
- Toggle Clamps

INSTALLATION AND TECHNICAL DATA

RECOMMENDED CHIP CLEARANCE:

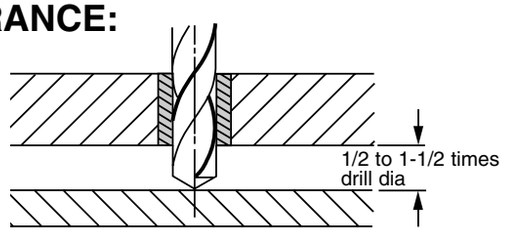

To minimize drill bending and maximize hole accuracy, mount drill bushings as close to the workpiece as possible while still allowing adequate chip clearance. The necessary clearance depends on workpiece material and chip stringiness. For example, cast iron, with fine chips requires about 1/2 times drill diameter for chip clearance. Materials that produce long, stringy chips, such as cold-rolled steel and aluminum, require at least one-drill-diameter clearance. To reduce clearance even with long, stringy chips, exit-end chip breakers are available…see pages 42-43.

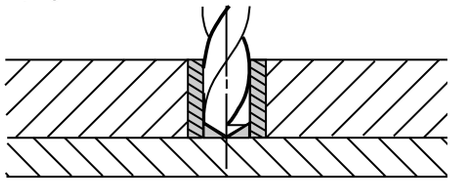

Direct workpiece contact is usually not recommended. Chips can escape only up through the drill's flutes, drill-bearing length is shortened by the drill point's length, and drill-withdrawal burrs can raise the jig plate. Direct contact may be necessary, though, for maximum bearing length when drilling sloped surfaces (see below). Also, reamer bushings can be mounted much closer than drill bushings, due to much finer chips, for more-accurate hole finishing.

SLOPED WORKPIECE SURFACES:

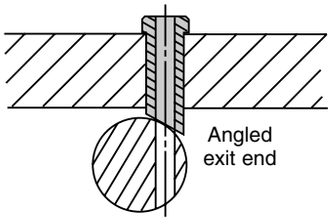

Whenever the drilling axis is not perpendicular to the workpiece surface, locate the exit end as close to the part as possible. Otherwise the drill will tend to wander. For maximum drill guiding, we recommend specifying bushings with an angle milled on the exit end, tangent to the workpiece surface at point of entry.

SPECIAL BUSHINGS FOR CLOSE HOLE SPACING:

When holes are located close together, special bushings are sometimes required. Thinwall bushings, where the bushing ID is larger than the normal ID range for a given OD, are often a good solution. Holes for thinwall bushings must be very accurate and round, because these bushings are more-easily distorted. For very-close hole spacing, especially with headed bushings, specify bushings with ground flats.

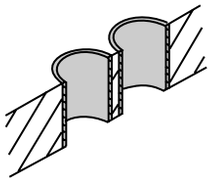

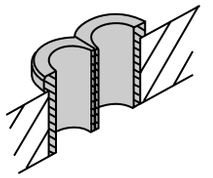

INSTALLATION-HOLE PREPARATION:

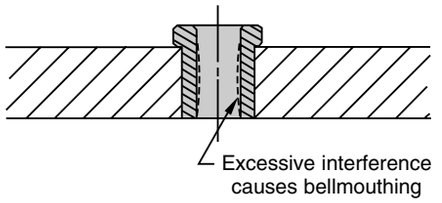

To avoid jig-plate or bushing distortion, do not use excessive interference fits on press-fit bushings. See table below for recommended hole sizes in unhardened steel or cast iron jig plates. Always prepare installation holes using a jig borer or reamer. Standard chucking reamers (with a plus tolerance) usually produce installation holes to the tolerances shown in the table. Other factors to consider are: (1) headed bushings require less interference to resist drilling thrust; (2) longer bushings in thick plates require less interference; (3) bushings with thinner walls are more prone to distortion; (4) less-ductile jig-plate materials require less interference.

USA

PRESS-FIT BUSHING OD		RECOMMENDED HOLE SIZE
NOM.	ACTUAL	
5/32	.1578-.1575	.1565-.1570
3/16	.1891-.1888	.1880-.1883
13/64	.2046-.2043	.2037-.2040
1/4	.2516-.2513	.2507-.2510
5/16	.3141-.3138	.3132-.3135
3/8	.3766-.3763	.3757-.3760
13/32	.4078-.4075	.4069-.4072
7/16	.4392-.4389	.4382-.4385
1/2	.5017-.5014	.5007-.5010
9/16	.5642-.5639	.5632-.5635
5/8	.6267-.6264	.6257-.6260
3/4	.7518-.7515	.7507-.7510
7/8	.8768-.8765	.8757-.8760
1	1.0018-1.0015	1.0007-1.0010
1-1/8	1.1270-1.1267	1.1257-1.1260
1-1/4	1.2520-1.2517	1.2507-1.2510
1-3/8	1.3772-1.3768	1.3757-1.3760
1-1/2	1.5021-1.5018	1.5007-1.5010
1-3/4	1.7523-1.7519	1.7507-1.7510
2-1/4	2.2525-2.2521	2.2507-2.2510
2-3/4	2.7526-2.7522	2.7507-2.7510

METRIC

PRESS-FIT BUSHING OD		RECOMMENDED HOLE SIZE (H7)
NOM.	ACTUAL (s6)	
3mm	3.020-3.014mm	3.000-3.010mm
4mm	4.027-4.019mm	4.000-4.012mm
5mm	5.027-5.019mm	5.000-5.012mm
6mm	6.027-6.019mm	6.000-6.012mm
7mm	7.032-7.023mm	7.000-7.015mm
8mm	8.032-8.023mm	8.000-8.015mm
10mm	10.032-10.023mm	10.000-10.015mm
12mm	12.039-12.028mm	12.000-12.018mm
15mm	15.039-15.028mm	15.000-15.018mm
18mm	18.039-18.028mm	18.000-18.018mm
22mm	22.048-22.035mm	22.000-22.021mm
26mm	26.048-26.035mm	26.000-26.021mm
30mm	30.048-30.035mm	30.000-30.021mm
35mm	35.059-35.043mm	35.000-35.025mm
42mm	42.059-42.043mm	42.000-42.025mm
48mm	48.059-48.043mm	48.000-48.025mm
55mm	55.072-55.053mm	55.000-55.030mm
62mm	62.072-62.053mm	62.000-62.030mm
70mm	70.078-70.059mm	70.000-70.030mm
78mm	78.078-78.059mm	78.000-78.030mm
85mm	85.093-85.071mm	85.000-85.035mm
95mm	95.093-95.071mm	95.000-95.035mm
105mm	105.101-105.079mm	105.000-105.035mm
115mm	115.101-115.079mm	115.000-115.035mm
125mm	125.117-125.092mm	125.000-125.040mm

Carr Lane®
MANUFACTURING CO.
4200 Carr Lane Ct., P.O. Box 191970
St. Louis, Missouri 63119-7970 USA
Phone: 314-647-6200, FAX: 314-647-5736
Web Site: www.carrlane.com

INSTALLATION AND TECHNICAL DATA

UNGROUND BUSHINGS AVAILABLE FOR OVERSIZE HOLES:

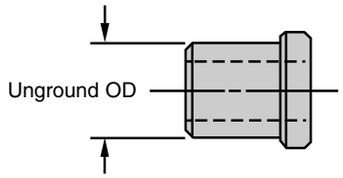

We offer bushings with unfinished ODs for custom-fitting to oversize holes. They are slightly larger than nominal diameter to provide grinding stock, .005-.020 extra, depending on the OD size (see charts under each specific bushing type). We recommend grinding on a mandrel to hold ID/OD concentricity.

INSTALLATION PROCEDURE:

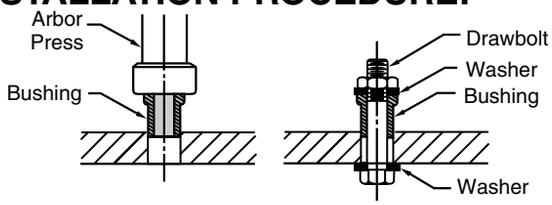

We recommend installing bushings with an arbor press whenever possible. If the bushing's OD is large enough, you can also use a drawbolt with two washers as shown above. If a hammer is the only tool available, do not strike the bushing directly or it could fracture. Use a soft-metal punch to cushion the blows. Before installing a press-fit bushing, lubricate the inside of the mounting hole and outside of the bushing with a lubricant such as lithium grease. Otherwise the bushing may score the mounting hole, and may be difficult to replace later.

GROUND LEAD FOR EASY INSTALLATION:

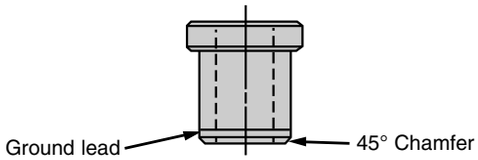

All bushings feature a concentric ground lead and a 45° chamfer on the exit end to ensure perfect alignment during installation.

COUNTERBORES ON LONG BUSHINGS:

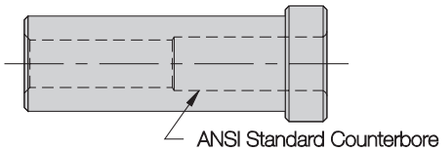

Long bushings with small IDs are slightly counterbored for proper drill-bearing length and chip clearance, as specified by ANSI standards. Counterbores prevent binding and heat buildup due to excessive bearing length. See chart on page 6 for ANSI counterbore depths. Counterbore diameters are generally 1/32 inch larger than the inside diameter, and are angled at the bottom for smooth entrance. No-counterbore bushings are available on request as specials.

DRILL ENTRANCE RADIUS:

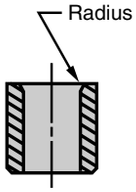

Bushings feature a blended and polished radius at the drill-entrance end for smooth drill entry and proper alignment, preventing drill wear and breakage. Radius size varies in proportion to drill size.

CONCENTRICITY:

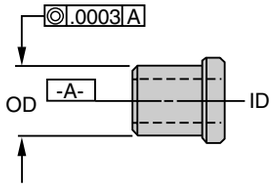

Bushing OD is ground concentric to the ID to within .0003 TIR for ID sizes from 1/8 inch to 1/2 inch (3mm to 12mm), unless otherwise indicated. For larger or smaller sizes, concentricity is within .0005 TIR. Unground bushings are concentric to within .006 TIR. On counterbored bushings, concentricity applies only over the drill-bearing length.

OTHER TOLERANCES:

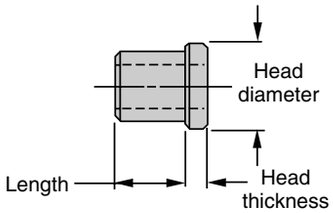

Any dimensions where tolerances are not specifically listed are held to +/- .010 inches on standard ANSI sizes, and +/-.015 inches on larger sizes (extended range). Special tolerances for any dimension are available on request as specials.

MATERIAL:

Standard drill-bushing material is durable 1144 Stressproof steel, heat treated to achieve RC 62-64 ID hardness, and other high-carbon steels. Optional materials such as tungsten carbide (Grade C2 carbide with steel head), 52100 steel, A2 tool steel, D2 tool steel, M2 tool steel, 416 stainless, 440C stainless, 17-4PH stainless, 303 stainless, 660 bronze, Ampco 18 bronze, Ampco 21 bronze, Oilite, and brass are available as specials. See pages 13, 19, and 27 for carbide bushings.

Carr Lane®
MANUFACTURING CO.
4200 Carr Lane Ct., P.O. Box 191970
St. Louis, Missouri 63119-7970 USA
Phone: 314-647-6200, FAX: 314-647-5736
Web Site: www.carrlane.com

BUSHING SELECTION

USA				METRIC			
P	20	8	.1250	PM	8	12	4.50
Type	OD in 64ths of an inch	Length in 16ths of an inch	ID as 4-place decimal inch	Type	OD in mm	Length in mm	ID as 2-place decimal mm

PRESS FIT:

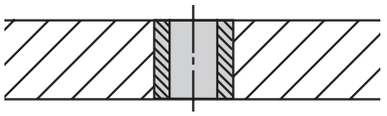

Types **P, PC** (carbide), and **PM** (metric). This is the most-popular and least-expensive drill bushing. P bushings are permanently pressed into the jig plate, usually flush with the top surface. They are generally used for single-step drilling or reaming operations when you do not expect to replace bushings during the tooling's lifetime. P bushings can be mounted closer together than headed bushings, but offer less resistance to heavy axial loads.

HEAD PRESS FIT:

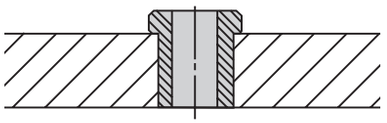

Types **H**, **HC** (carbide), and **HM** (metric). Similar to a P bushing, but with a head to resist heavy axial loads. H bushings are permanently pressed into the jig plate. They are generally used for single-step drilling or reaming operations when you do not expect to replace bushings during the tooling's lifetime. The head can be left exposed, or recessed by counterboring the installation hole. Note: The "length" listed for a USA head-press-fit bushing refers to its length under the head, while the metric version's "length" is its overall length.

SERRATED PRESS FIT:

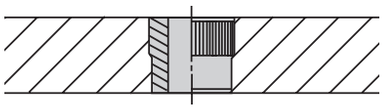

Types **SP** and **SPM** (metric). Similar to a P bushing, but with top serrations to prevent rotation in soft materials. Recommended in high-torque situations for materials such as magnesium, aluminum, masonite, or wood. Finish-ground OD ensures accurate ID location. Serrations also resist axial force to prevent pushing the bushing through the jig plate.

SLIP/FIXED RENEWABLE:

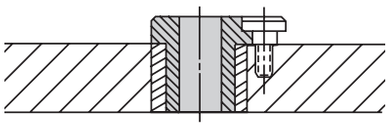

Types **SF, SFC/SC/FC** (carbide), and **SFM** (metric). Replaceable bushing generally used with a liner bushing and lockscrew. Use when you expect to replace bushings during the tooling's lifetime, or when you want to switch bushings to perform multi-step operations with the same tooling. SF bushings combine the benefits of older S-type slip-renewable and F-type fixed-renewable bushings: One side has a small recess for fixed mounting; the other has a locking recess that allows the bushing to slip down, then lock in place by rotating it. S and F types are now obsolete (except in carbide) and combination SF bushings will be furnished at no extra charge.

FLAT MILLED RENEWABLE:

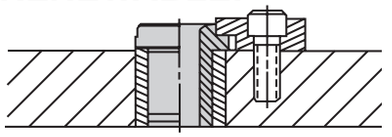

Types **FM** and **FMC** (carbide). Replaceable bushing used for extra resistance to rotational forces under harsh conditions. This bushing, generally used with a liner, has a milled locking flat to allow fastening securely with a flat clamp. FM bushings also have a standard recess on the other side to allow using a lockscrew instead.

LINER:

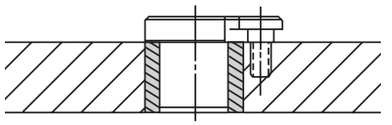

Types **L** and **PM** (metric). Liners are permanent bushings used to hold renewable drill bushings. The liner's ID has a precise sliding fit with the renewable bushing's OD. The hardened liner accurately locates the renewable bushing and protects the jig plate from wear caused by frequent bushing replacement. Note: Metric liner bushings are the same as metric press-fit bushings.

HEAD LINER:

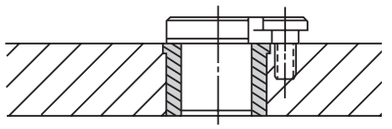

Types **HL** and **HM** (metric). Similar to an L bushing, but with a head to resist heavy axial loads. Head liners are permanent bushings used to hold renewable drill bushings. The head liner's ID has a precise sliding fit with the renewable bushing's OD. The hardened head liner accurately locates the renewable bushing and protects the jig plate from wear caused by frequent bushing replacement. Note: The "length" listed for a head liner refers to its overall length, not its length under the head. Metric head-liner bushings are the same as metric head-press-fit bushings.

UN-A-LOK® LINER:

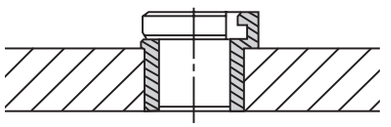

Types **UL** and **ULM** (metric). Similar to an HL head liner, but incorporating a special locking tab that eliminates the need for a lockscrew. Un-A-Lok® liners are permanent bushings used to hold SF renewable drill bushings (on the "slip" side only, not the "fixed" side). Although slightly more expensive than a head liner plus a lock screw, installation time is dramatically reduced.

CHIP BREAKER:

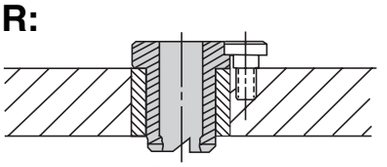

Types **CH** and **CHM** (metric). Similar to an SF renewable bushing, but with specially designed chip-breaking notches on the drill-exit end. Use to break up chips from tough, stringy materials, to reduce friction and heat buildup. Reduces bushing wear at the drill-exit end and reduces the chance of tool or workpiece damage. A chip-breaker bushing should extend beyond its liner to allow chips to escape. Chip breakers are also available on other bushing types such as P, H, and DC.

Carr Lane®
MANUFACTURING CO.
4200 Carr Lane Ct., P.O. Box 191970
St. Louis, Missouri 63119-7970 USA
Phone: 314-647-6200, FAX: 314-647-5736
Web Site: www.carrlane.com

COUNTERBORE DATA

TYPE P — DRILL BEARING LENGTH

DRILL SIZE (ID)	OD	BUSHING LENGTH											
		1/4	5/16	3/8	1/2	3/4	1	1-3/8	1-1/2	1-3/4	2-1/8	2-1/2	3
.0135 - .0291	5/32	FULL	FULL	FULL	5/16	5/16	5/16	5/16	5/16	5/16	5/16	5/16	5/16
.0292 - .0519													
.0520 - .0625													
.0135 - .0291	3/16	FULL	FULL	FULL	5/16	5/16	5/16	5/16	5/16	5/16	5/16	5/16	5/16
.0292 - .0519													
.0520 - .0634													
.0635 - .0995					FULL	7/16	7/16	7/16	7/16	7/16	7/16	7/16	7/16
.0135 - .0291	13/64	FULL	FULL	FULL	5/16	5/16	5/16	5/16	5/16	5/16	5/16	5/16	5/16
.0292 - .0519													
.0520 - .0634													
.0635 - .0995					FULL	7/16	7/16	7/16	7/16	7/16	7/16	7/16	7/16
.0980 - .1406	1/4	FULL	FULL	FULL	FULL	7/16	5/8	5/8	5/8	5/8	5/8	5/8	5/8
.1250 - .1935	5/16	FULL	FULL	FULL	FULL	FULL	5/8	5/8	5/8	5/8	5/8	5/8	5/8
.1935 - .2880	3/8	FULL	FULL	FULL	FULL	FULL	5/8	5/8	5/8	5/8	5/8	5/8	5/8
.1875 - .2570	13/32	FULL	FULL	FULL	FULL	FULL	5/8	5/8	5/8	5/8	5/8	5/8	5/8
.2340 - .2900	7/16	FULL	FULL	FULL	FULL	FULL	5/8	5/8	5/8	5/8	5/8	5/8	5/8
.1875 - .3160	1/2	FULL	FULL	FULL	FULL	FULL	5/8	3/4	3/4	3/4	3/4	3/4	3/4
.3125 - .4375	5/8	FULL	FULL	FULL	FULL	FULL	FULL	FULL	FULL	FULL	FULL	1-1/2	1-1/2
.3125 - .5313	3/4	FULL	FULL	FULL	FULL	FULL	FULL	FULL	FULL	FULL	FULL	1-1/2	1-1/2

TYPE H — DRILL BEARING LENGTH

RANGE (ID)	OD	BUSHING LENGTH (UNDER HEAD)											
		1/4	5/16	3/8	1/2	3/4	1	1-3/8	1-1/2	1-3/4	2-1/8	2-1/2	3
.0135 - .0291	5/32	FULL	FULL	5/16	5/16	5/16	5/16	5/16	5/16	5/16	5/16	5/16	5/16
.0292 - .0519													
.0520 - .0625				FULL									
.0135 - .0291	13/64	FULL	FULL	5/16	5/16	5/16	5/16	5/16	5/16	5/16	5/16	5/16	5/16
.0292 - .0519													
.0520 - .0634				FULL									
.0635 - .0995					7/16	7/16	7/16	7/16	7/16	7/16	7/16	7/16	7/16
.0980 - .1406	1/4	FULL	FULL	FULL	7/16	7/16	5/8	5/8	5/8	5/8	5/8	5/8	5/8
.1250 - .1935	5/16	FULL	FULL	FULL	FULL	FULL	5/8	5/8	5/8	5/8	5/8	5/8	5/8
.1935 - .2280	3/8	FULL	FULL	FULL	FULL	FULL	5/8	5/8	5/8	5/8	5/8	5/8	5/8
.1875 - .2570	13/32	FULL	FULL	FULL	FULL	FULL	5/8	5/8	5/8	5/8	5/8	5/8	5/8
.2340 - .2900	7/16	FULL	FULL	FULL	FULL	FULL	5/8	5/8	5/8	5/8	5/8	5/8	5/8
.1875 - .3160	1/2	FULL	FULL	FULL	FULL	FULL	3/4	3/4	3/4	3/4	3/4	3/4	3/4
.3125 - .4375	5/8	FULL	FULL	FULL	FULL	FULL	FULL	FULL	FULL	FULL	FULL	1-1/2	1-1/2
.3125 - .5313	3/4	FULL	FULL	FULL	FULL	FULL	FULL	FULL	FULL	FULL	FULL	1-1/2	1-1/2

TYPES SF & FM — DRILL BEARING LENGTH

DRILL SIZE (ID)	OD	BUSHING LENGTH (UNDER HEAD)												
		1/4	5/16	3/8	1/2	5/8	3/4	1	1-3/8	1-1/2	1-3/4	2-1/8	2-1/2	3
.0135 - .0291	3/16	1/4	5/16	5/16	5/16	5/16	5/16	5/16	5/16	5/16	5/16	5/16	5/16	5/16
.0292 - .0519		FULL												
.0520 - .0634														
.0635 - .0980				3/8	7/16	7/16	7/16	7/16	7/16	7/16	7/16	7/16	7/16	7/16
.0995 - .1405	1/4	FULL	FULL	3/8	7/16	7/16	7/16	7/16	7/16	7/16	7/16	7/16	7/16	7/16
.0135 - .0291	5/16	1/4	5/16	5/16	5/16	5/16	5/16	5/16	5/16	5/16	5/16	5/16	5/16	5/16
.0292 - .0519		FULL												
.0520 - .0634														
.0635 - .0934			FULL	3/8	7/16	7/16	7/16	7/16	7/16	7/16	7/16	7/16	7/16	7/16
.0935 - .1249				FULL										
.1250 - .1935				FULL	FULL	FULL	5/8	5/8	5/8	5/8	5/8	5/8	5/8	5/8
.1935 - .2280	3/8	FULL	FULL	FULL	FULL	FULL	FULL	5/8	5/8	5/8	5/8	5/8	5/8	5/8
.2340 - .2900	7/16	FULL	FULL	FULL	FULL	FULL	FULL	5/8	5/8	5/8	5/8	5/8	5/8	5/8
.1405 - .1889	1/2	FULL	FULL	FULL	FULL	FULL	5/8	5/8	5/8	5/8	5/8	5/8	5/8	5/8
.1890 - .3438							FULL	7/8	1	1	1	1	1	1
.2950 - .5625	3/4	FULL	FULL	FULL	FULL	FULL	FULL	FULL	FULL	FULL	FULL	FULL	1-1/2	1-1/2

Carr Lane® MANUFACTURING CO.
4200 Carr Lane Ct., P.O. Box 191970
St. Louis, Missouri 63119-7970 USA
Phone: 314-647-6200, FAX: 314-647-5736
Web Site: www.carrlane.com

HEAD PRESS FIT

H

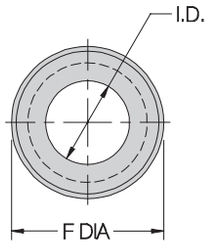

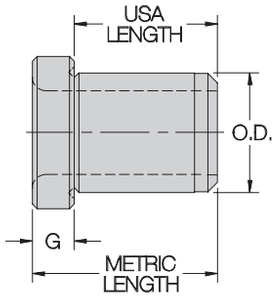

USA

BODY OD	F DIA	G
5/32	1/4	3/32
13/64	19/64	3/32
1/4	23/64	3/32
5/16	27/64	1/8
3/8	1/2	3/32
13/32	1/2	5/32
7/16	9/16	3/32
1/2	39/64	7/32
9/16	11/16	3/32
5/8	51/64	7/32
3/4	59/64	7/32
7/8	1-7/64	1/4
1	1-15/64	5/16
1-1/4	1-1/2	1/4
1-3/8	1-39/64	3/8
1-3/4	1-63/64	3/8
2-1/4	2-31/6	3/8

For dimensions of larger USA sizes, see page 18 (Extended Range).

METRIC

BODY OD	F DIA	G
4mm	7mm	2mm
5mm	8mm	2mm
6mm	9mm	2.5mm
7mm	10mm	2.5mm
8mm	11mm	2.5mm
10mm	13mm	3mm
12mm	15mm	3mm
15mm	18mm	3mm
18mm	22mm	4mm
22mm	26mm	4mm
26mm	30mm	4mm
30mm	34mm	5mm
35mm	39mm	5mm
42mm	46mm	5mm
48mm	52mm	5mm
55mm	59mm	5mm
62mm	66mm	6mm
70mm	74mm	6mm
78mm	82mm	6mm
85mm	90mm	6mm
95mm	100mm	6mm
105mm	110mm	6mm
115mm	120mm	6mm
125mm	130mm	6mm

APPLICATIONS:

Similar to a P bushing, but with a head to resist heavy axial loads. H bushings are permanently pressed into the jig plate. They are generally used for single-step drilling or reaming operations when you do not expect to replace bushings during the tooling's lifetime. The head can be left exposed, or recessed by counterboring the installation hole. **Note: The "length" listed for a USA head-press-fit bushing refers to its length under the head, while the metric version's "length" is its overall length.**

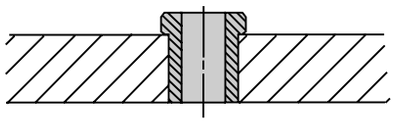

ORDERING EXAMPLES:

H-20-16-.1250	Standard USA bushing, inch ID
H-20-16-.1772	Standard USA bushing, mm ID (.1772 = 4.50mm)
H-20-16U-.1250	Unground OD
H-20-16-.1250 REAMER	Reamer tolerance on ID
H-20-16-.1250 NCB	No counterbore on long bushings marked with * (no counterbore is standard on all other bushings)
HC-20-16-.1250	Carbide bushing
HM-8-12-4.50	Standard metric bushing

Prices shown here apply to standard bushings only, either ground or unground OD, for a standard drill size within the stated ID range. See back cover for decimal equivalents. To price non-standard sizes, including all reamer and tap-guide bushings, see page 7.

STANDARD ID TOLERANCES:

From #80 to 1/4"	+.0001/+.0004	From .35 to 3mm	+.002/+.008mm
		Over 3 to 6mm	+.004/+.012mm
Over 1/4 to 3/4"	+.0001/+.0005	Over 6 to 10mm	+.005/+.014mm
		Over 10 to 18mm	+.006/+.017mm
Over 3/4 to 1-1/2"	+.0002/+.0006	Over 18 to 30mm	+.007/+.020mm
		Over 30 to 50mm	+.009/+.025mm
Over 1-1/2 to 2-3/4"	+.0003/+.0007	Over 50 to 80mm	+.010/+.029mm
		Over 80 to 120mm	+.012/+.034mm
		(G6 tolerance)	

REAMER ID TOLERANCES:

From #60 a 1/4"	+.0005/+.0008	From 1 to 3mm	+.006/+.012mm
		Over 3 to 6mm	+.010/+.018mm
Over 1/4 to 1"	+.0006/+.0010	Over 6 to 10mm	+.013/+.022mm
		Over 10 to 18mm	+.016/+.027mm
Over 1 to 1-1/2"	+.0008/+.0012	Over 18 to 30mm	+.020/+.033mm
		(F6 tolerance)	

ID RANGE	OD	LENGTH	ANSI PART NO.	PRICE 1-5
.0135-.0291 #80-#70 .35-.70mm	**5/32** .1578-.1575 (.166-.161 UNG)	1/4	H-10-4	27.38
		5/16	H-10-5	28.03
		*3/8	H-10-6	28.73
		*1/2	H-10-8	29.05
.0292-.0519 #69-3/64 .75-1.25mm		1/4	H-10-4	24.27
		5/16	H-10-5	24.66
		*3/8	H-10-6	25.35
		*1/2	H-10-8	25.98
		*3/4	H-10-12	28.53
.0520-.0625 #55-1/16 1.30-1.60mm		1/4	H-10-4	19.34
		5/16	H-10-5	19.34
		3/8	H-10-6	20.05
		*1/2	H-10-8	20.37
		*3/4	H-10-12	22.61

* Counterbored, leaving correct drill-bearing length and chip clearance (see page 6 for bearing length).

QUANTITY DISCOUNTS

Quantity	1 -5	6 -11	12 -23	24 -49	50 -99	100 -199	200 -499	500 Up
Discount %	Net	18%	29%	34%	42%	48%	50%	52%
Multiplier	1.00	.82	.71	.66	.58	.52	.50	.48

Carr Lane MANUFACTURING CO.
4200 Carr Lane Ct., P.O. Box 191970
St. Louis, Missouri 63119-7970 USA
Phone: 314-647-6200, FAX: 314-647-5736
Web Site: www.carrlane.com

H HEAD PRESS FIT

ID RANGE	OD	LENGTH	ANSI PART NO.	PRICE 1-5
.0135-.0291 #80-#70 .35-.70mm	**13/64** .2046-.2043 (.213-.208 UNG)	1/4	H-13-4	27.38
		5/16	H-13-5	28.03
		*3/8	H-13-6	28.73
		*1/2	H-13-8	29.05
.0292-.0519 #69-3/64 .75-1.30mm		1/4	H-13-4	24.27
		5/16	H-13-5	24.66
		*3/8	H-13-6	25.35
		*1/2	H-13-8	25.98
		*3/4	H-13-12	28.53
.0520-.0634 #55-1/16 1.35-1.60mm		1/4	H-13-4	19.66
		5/16	H-13-5	19.66
		3/8	H-13-6	20.05
		*1/2	H-13-8	20.37
		*3/4	H-13-12	22.61
		*1	H-13-16	25.74
.0635-.0995 #52-#39 1.65-2.50mm		1/4	H-13-4	11.25
		5/16	H-13-5	11.36
		3/8	H-13-6	12.05
		*1/2	H-13-8	12.39
		*3/4	H-13-12	14.05
		*1	H-13-16	18.19
.0980-.1406 #40-9/64 2.50-3.50mm	**1/4** .2516-.2513 (.265-.260 UNG)	1/4	H-16-4	9.70
		5/16	H-16-5	10.34
		3/8	H-16-6	10.87
		*1/2	H-16-8	11.25
		*5/8	H-16-10	12.39
		*3/4	H-16-12	13.79
		*1	H-16-16	18.70
		*1-3/8	H-16-22	25.28
		*1-1/2	H-16-24	27.00
.1250-.1935 1/8-#10 3.20-4.90mm	**5/16** .3141-.3138 (.327-.322 UNG)	1/4	H-20-4	7.98
		5/16	H-20-5	8.49
		3/8	H-20-6	9.00
		1/2	H-20-8	9.19
		5/8	H-20-10	9.39
		3/4	H-20-12	9.51
		*1	H-20-16	11.36
		*1-3/8	H-20-22	19.22
		*1-1/2	H-20-24	21.77
.1935-.2280 #10-#1 4.90-5.80mm	**3/8** .3766-.3763 (.390-.385 UNG)	1/4	H-24-4	7.29
		5/16	H-24-5	7.98
		3/8	H-24-6	8.30
		1/2	H-24-8	8.49
		5/8	H-24-10	8.82
		3/4	H-24-12	9.00
		*1	H-24-16	10.72
.1875-.2570 3/16-F 4.75-6.50mm	**13/32** .4078-.4075 (.421-.416 UNG)	1/4	H-26-4	7.29
		5/16	H-26-5	7.66
		3/8	H-26-6	8.30
		1/2	H-26-8	8.49
		3/4	H-26-12	9.00
		*1	H-26-16	10.72
		*1-3/8	H-26-22	12.05
		*1-1/2	H-26-24	13.41
		*1-3/4	H-26-28	14.81

ID RANGE	OD	LENGTH	ANSI PART NO.	PRICE 1-5
.2340-.2900 A-L 5.90-7.40mm	**7/16** .4392-.4389 (.453-.448 UNG)	1/4	H-28-4	7.29
		5/16	H-28-5	7.98
		3/8	H-28-6	8.30
		1/2	H-28-8	8.49
		5/8	H-28-10	8.82
		3/4	H-28-12	9.00
		*1	H-28-16	10.72
.1875-.3160 3/16-O 4.75-8.00mm	**1/2** .5017-.5014 (.520-.515 UNG)	1/4	H-32-4	7.29
		5/16	H-32-5	7.66
		3/8	H-32-6	8.30
		1/2	H-32-8	8.49
		3/4	H-32-12	9.00
		*1	H-32-16	10.72
		*1-3/8	H-32-22	12.05
		*1-1/2	H-32-24	13.41
		*1-3/4	H-32-28	14.81
.2950-.3438 M-11/32 7.50-8.75mm	**9/16** .5642-.5639 (.582-.577 UNG)	1/4	H-36-4	8.30
		5/16	H-36-5	7.29
		3/8	H-36-6	7.98
		1/2	H-36-8	7.98
		5/8	H-36-10	8.30
		3/4	H-36-12	8.30
		1	H-36-16	9.00
.3125-.4375 5/16-7/16 7.90-11.00mm	**5/8** .6267-.6264 (.645-.640 UNG)	1/4	H-40-4	8.30
		5/16	H-40-5	7.29
		3/8	H-40-6	7.66
		1/2	H-40-8	7.66
		5/8	H-40-10	8.30
		3/4	H-40-12	8.30
		1	H-40-16	9.00
		1-3/8	H-40-22	12.05
		1-1/2	H-40-24	12.77
		1-3/4	H-40-28	13.79
		2-1/8	H-40-34	15.97
.3125-.5312 5/16-17/32 7.90-13.50mm	**3/4** .7518-.7515 (.770-.765 UNG)	1/4	H-48-4	9.00
		5/16	H-48-5	7.98
		3/8	H-48-6	8.30
		1/2	H-48-8	8.30
		5/8	H-48-10	8.69
		3/4	H-48-12	9.00
		1	H-48-16	9.70
		1-1/4	H-48-20	12.39
		1-3/8	H-48-22	12.39
		1-1/2	H-48-24	13.08
		1-3/4	H-48-28	13.92
		2-1/8	H-48-34	16.35

* Counterbored, leaving correct drill-bushing length and clearance (see page 6 for bearing length).

QUANTITY DISCOUNTS

Quantity	1 -5	6 -11	12 -23	24 -49	50 -99	100 -199	200 -499	500 Up
Discount %	Net	18%	29%	34%	42%	48%	50%	52%
Multiplier	1.00	.82	.71	.66	.58	.52	.50	.48

Carr Lane®
MANUFACTURING CO.
4200 Carr Lane Ct., P.O. Box 191970
St. Louis, Missouri 63119-7970 USA
Phone: 314-647-6200, FAX: 314-647-5736
Web Site: www.carrlane.com

HEAD PRESS FIT

H

ID RANGE	OD	LENGTH	ANSI PART NO.	PRICE 1-5
.5000-.6562 1/2-21/32 12.50-16.50mm	**7/8** .8768-.8765 (.895-.890 UNG)	1/2	H-56-8	10.02
		5/8	H-56-10	10.02
		3/4	H-56-12	10.22
		1	H-56-16	10.72
		1-1/4	H-56-20	11.74
		1-3/8	H-56-22	11.74
		1-1/2	H-56-24	13.08
		1-3/4	H-56-28	14.44
		2-1/8	H-56-34	16.35
		2-1/2	H-56-40	19.54
.5000-.7656 1/2-49/64 12.50-19.50mm	**1** 1.0018-1.0015 (1.020-1.015 UNG)	1/2	H-64-8	10.34
		3/4	H-64-12	10.34
		1	H-64-16	11.25
		1-3/8	H-64-22	12.05
		1-1/2	H-64-24	14.05
		1-3/4	H-64-28	15.83
		2-1/8	H-64-34	18.52
		2-1/2	H-64-40	21.25
		3	H-64-48	32.83
.8594-.9375 55/64-15/16 22.00-24.00mm	**1-1/4** 1.2520-1.2517 (1.270-1.265 UNG)	5/8	H-80-10	15.83
		3/4	H-80-12	15.13
		1	H-80-16	16.67
		1-1/4	H-80-20	18.52
		1-1/2	H-80-24	19.92
		1-3/4	H-80-28	21.25
		2	H-80-32	24.13
.6250-1.0312 5/8–1-1/32 16.00-26.00mm	**1-3/8** 1.3772-1.3768 (1.395-1.390 UNG)	1/2	H-88-8	16.85
		3/4	H-88-12	15.45
		1	H-88-16	17.00
		1-3/8	H-88-22	18.90
		1-1/2	H-88-24	20.23
		1-3/4	H-88-28	21.58
		2-1/8	H-88-34	22.41
		2-1/2	H-88-40	25.18
		3	H-88-48	39.26
1.0000-1.3906 1–1-25/64 26.00-35.00mm	**1-3/4** 1.7523-1.7519 (1.770-1.765 UNG)	3/4	H-112-12	22.28
		1	H-112-16	20.55
		1-3/8	H-112-22	22.78
		1-1/2	H-112-24	23.80
		1-3/4	H-112-28	24.82
		2-1/8	H-112-34	28.21
		2-1/2	H-112-40	31.28
		3	H-112-48	44.17
1.3750-1.7656 1-3/8-1-49/64 35.00-45.00mm	**2-1/4** 2.2525-2.2521 (2.270-2.265 UNG)	1	H-144-16	26.50
		1-3/8	H-144-22	29.44
		1-1/2	H-144-24	31.09
		1-3/4	H-144-28	31.09
		2-1/8	H-144-34	36.51
		2-1/2	H-144-40	40.09
		3	H-144-48	50.83

QUANTITY DISCOUNTS

Quantity	1 -5	6 -11	12 -23	24 -49	50 -99	100 -199	200 -499	500 Up
Discount %	Net	18%	29%	34%	42%	48%	50%	52%
Multiplier	1.00	.82	.71	.66	.58	.52	.50	.48

A great speaker is one whose spirit enters the souls of his listeners.

If you have no goals you have nothing to reach for.

Carr Lane MANUFACTURING CO.
4200 Carr Lane Ct., P.O. Box 191970
St. Louis, Missouri 63119-7970 USA
Phone: 314-647-6200, FAX: 314-647-5736
Web Site: www.carrlane.com

(Rev. 6-06)

REST BUTTONS

STEEL: 1144, HEAT TREATED RC 40-45 BLACK OXIDE FINISH
STAINLESS STEEL: 300-SERIES

Precision rest button with a press-fit shank. Excellent as either a workpiece support or a jig foot.

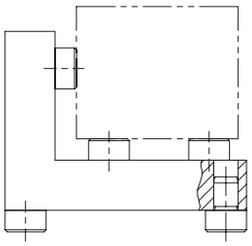

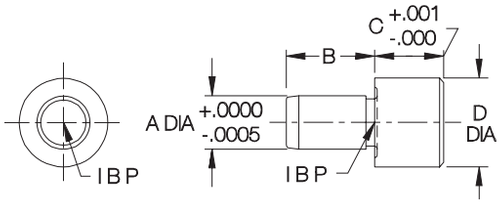

STEEL (USA)

PART NO.	A DIA NOMINAL	A DIA ACTUAL	B	C NOMINAL	C ACTUAL	D DIA
CL-12-RB	3/16	.1885	3/8	1/4	.2500	3/8
CL-13-RB				3/8	.3750	
CL-14-RB				1/2	.5000	
CL-2-RB	1/4	.2510	1/2	1/4	.2500	1/2
CL-3-RB				3/8	.3750	
CL-1-RB				1/2	.5000	
CL-5-RB	3/8	.3760	5/8	1/4	.2500	5/8
CL-6-RB				3/8	.3750	
CL-4-RB				1/2	.5000	
CL-7-RB				5/8	.6250	
CL-8-RB				3/4	.7500	
CL-15-RB	1/2	.5010	5/8	3/8	.3750	7/8
CL-9-RB				1/2	.5000	
CL-16-RB				5/8	.6250	
CL-17-RB	5/8	.6260	3/4	3/8	.3750	1
CL-10-RB				1/2	.5000	
CL-18-RB				3/4	.7500	
CL-19-RB	3/4	.7515	7/8	1/2	.5000	1-1/4
CL-11-RB				5/8	.6250	

STAINLESS STEEL (USA)

PART NO.	A DIA NOMINAL	A DIA ACTUAL	B	C NOMINAL	C ACTUAL	D DIA
CL-26432	3/16	.1885	1/4	1/4	.2500	3/8
CL-26433				3/8	.3750	
CL-26434				1/2	.5000	
CL-26542	1/4	.2510	5/16	1/4	.2500	1/2
CL-26646	5/16	.3135	5/16	3/4	.7500	1/2

STEEL (METRIC)

CLM-605-RB	6mm	.2372	.31	5mm	.1969	.39
CLM-610-RB				10mm	.3937	
CLM-805-RB	8mm	.3160	.39	5mm	.1969	.63
CLM-810-RB				10mm	.3937	
CLM-815-RB				15mm	.5906	
CLM-820-RB				20mm	.7874	
CLM-1010-RB	10mm	.3947	.47	10mm	.3937	.79
CLM-1015-RB				15mm	.5906	
CLM-1020-RB				20mm	.7874	

JIG REST BUTTONS

12L14 STEEL, CARBURIZED-HARDENED, BLACK OXIDE FINISH

Precision rest button mounted with a socket-head cap screw (not furnished). Excellent as either a workpiece support or a jig foot.

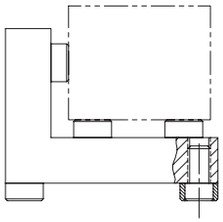

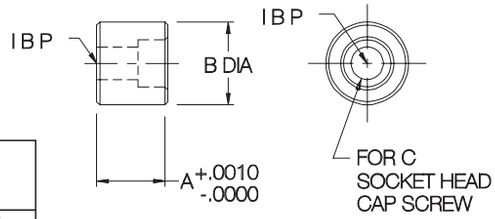

USA

PART NO.	B DIA	A NOMINAL	A ACTUAL	C
CL-24-JRB	1/2	1/8	.1250	#8*
CL-00-JRB		3/8	.3750	#10
CL-0-JRB		1/2	.5000	
CL-12-JRB	5/8	1/4	.2500	#10*
CL-13-JRB		3/8	.3750	1/4
CL-1-JRB		1/2	.5000	
CL-14-JRB		5/8	.6250	
CL-2-JRB		3/4	.7500	
CL-16-JRB		1	1.0000	
CL-17-JRB	7/8	3/8	.3750	1/4
CL-18-JRB		1/2	.5000	5/16
CL-3-JRB		5/8	.6250	
CL-19-JRB		3/4	.7500	
CL-20-JRB		1	1.0000	
CL-25-JRB	1-1/4	1/2	.5000	3/8
CL-21-JRB		3/4	.7500	
CL-6-JRB		1	1.0000	
CL-7-JRB		1-1/2	1.5000	
CL-8-JRB		2	2.0000	

* Flat-head screw these sizes only.

METRIC

PART NO.	B DIA	A NOMINAL	A ACTUAL	C
CLM-1-JRB	.63	10mm	.3937	M5
CLM-2A-JRB		15mm	.5906	
CLM-4-JRB	.79	10mm	.3937	M6
CLM-6A-JRB		15mm	.5906	
CLM-7A-JRB		20mm	.7874	
CLM-8-JRB		25mm	.9843	
CLM-11A-JRB	.98	15mm	.5906	M8
CLM-12A-JRB		20mm	.7874	
CLM-13-JRB		25mm	.9843	
CLM-14A-JRB	1.26	20mm	.7874	M10
CLM-15-JRB		25mm	.9843	
CLM-16A-JRB		30mm	1.1811	
CLM-17A-JRB		50mm	1.9685	

Carr Lane MANUFACTURING CO.
4200 Carr Lane Ct., P.O. Box 191970
St. Louis, Missouri 63119-7970 USA
Phone: 314-647-6200, FAX: 314-647-5736
Web Site: www.carrlane.com

Carr Lane's TOGGLE CLAMPS

HORIZONTAL-HANDLE HOLD-DOWN CLAMPS, VERTICAL-HANDLE HOLD-DOWN CLAMPS, PUSH/PULL PLUNGER CLAMPS, LATCH-ACTION CLAMPS, TOGGLE PLIERS, AIR-POWERED CLAMPS, AND ACCESSORIES.

Authorized distributor:

CARR LANE MANUFACTURING CO.
4200 Carr Lane Ct., P.O. Box 191970
St. Louis, Missouri 63119-7970
Phone: 314-647-6200, FAX: 314-647-5736
Web Site: www.carrlane.com

PRINTED IN U.S.A. 7308-796 COPYRIGHT 1996 CARR LANE MANUFACTURING CO.

GENERAL INFORMATION

TOGGLE-ACTION PRINCIPLES:

A toggle clamp is a quick-acting mechanical linkage where two of the elements make up a toggle action. Actuating the clamp first moves it into position, then applies clamping force by compressing or stretching the linkage elements after contacting the workpiece, then positively locks it by moving the toggle action's center pivot past the centerline of the other two pivots, against a stop.

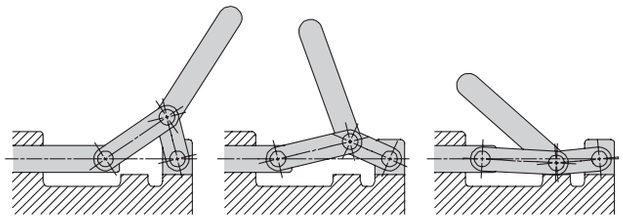

1 Moving into position — *2 Applying clamping force* — *3 Locking over center*

HOLDING CAPACITY:

The "holding capacity" listed for each clamp refers to the maximum external force that clamp can safely resist in its locked position without incurring any permanent deformation. For hold-down clamps, holding capacity is measured with the spindle as close as possible to the handle, and will be less at the end of the clamping arm.

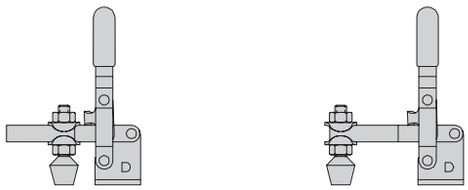

Spindle position for maximum capacity — *Spindle position for maximum reach*

CLAMPING FORCE:

Clamping force, the amount of force actually applied to the workpiece by closing and locking the clamp, is generally less than the stated holding capacity. This allows the clamp to have ample capacity to resist external machining forces. Actual clamping force depends on many factors including: spindle position, proper spindle-height adjustment, spindle cushioning (uncushioned hex-head spindles provide the greatest force), workpiece material, and the clamp's mechanical advantage. In most cases, roughly 1/2 of the stated holding capacity can be applied by hand with medium effort.

OPEN-ARM CLAMPS:

Open-arm hold-down clamps offer maximum flexibility and adjustability. Two flanged washers hold the spindle in place anywhere along the arm by tightening the jam nuts.

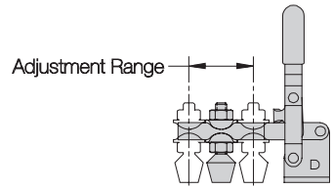

SOLID-ARM CLAMPS:

Solid-arm hold-down clamps are easily customized to a particular application. Using the weld-on bolt retainer, you can locate the spindle permanently in one place. The solid-arm version allows mounting the spindle at an angle, or shortening the clamping arm.

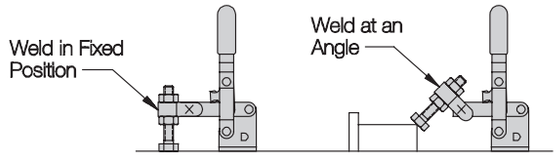

TOP-GRADE MATERIALS:

Carr Lane toggle clamps are made from only the finest-quality materials. Steel clamps are made from various types including 1008, 1010, 1018, and other fine steels. Pivot pins on most clamp models are 400-series stainless steel for extra durability. Many pivot points have hardened steel bushings for long life. Forged steel components, such as those on toggle pliers and push/pull clamps, are made from high-carbon steel. Many push/pull-clamp bases are made of nodular iron for wear resistance.

FINISHES:

Most steel clamps are zinc plated, unless otherwise noted. Virtually all clamps are also available with a black oxide finish as specials.

STAINLESS STEEL:

Many toggle-clamp models are available in 300-series stainless steel. These corrosion-resistant clamps are useful in chemical environments, plating operations, food processing, salt-spray environments, medical equipment, electronics fixturing, EDM fixturing, and marine environments. Various stainless steel grades, including 303 and 304, are used. Clamps normally furnished with a flat-cushion spindle in the steel version are supplied with a stainless steel hex-head spindle. Other clamps are available in stainless steel as specials.

AIR-POWERED CLAMPS:

The air cylinders on power toggle clamps have Buna N seals, rated for operating temperatures of -20° to +200° F. Note: Zinc plating also deteriorates at temperatures above 250°F.

MANUFACTURING CO.
4200 Carr Lane Ct., P.O. Box 191970
St. Louis, Missouri 63119-7970 USA
Phone: 314-647-6200, FAX: 314-647-5736
Web Site: www.carrlane.com

VERTICAL HANDLE

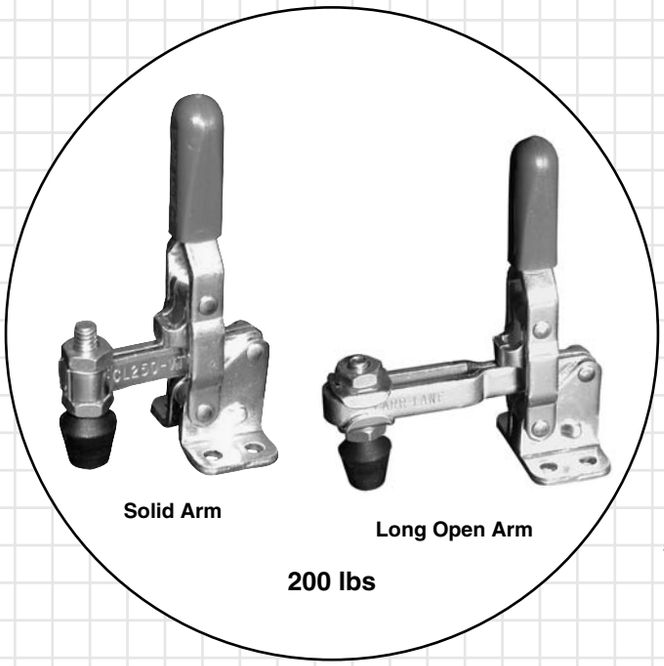

Solid Arm

Long Open Arm

200 lbs

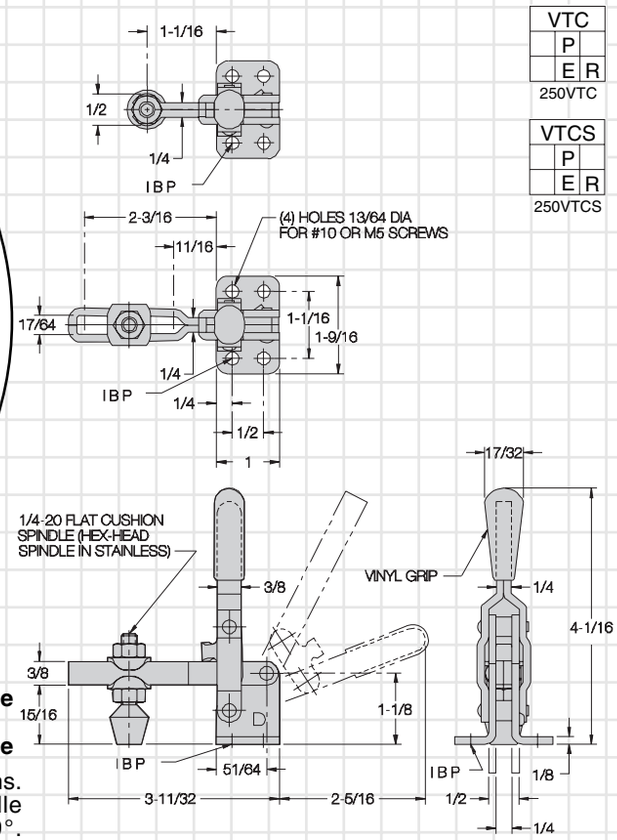

VTC
P
E R

250VTC

VTCS
P
E R

250VTCS

CL-250-VTC Solid Arm, Flanged Base
CL-253-VTC Long Open Arm, Flanged Base

Small-yet-powerful clamp available in several configurations. Choose either a solid arm, or a long open arm for spindle adjustment. Arm opens 117° while handle moves 69°. Supplied with 1/4-20 short flat-cushion spindle CL-14112-FC. Open-arm version supplied with (2) CL-148-TW flanged washers. Shipping weight 0.4 lbs.

Holding capacity: **200 lbs**

Also available in stainless steel . . .

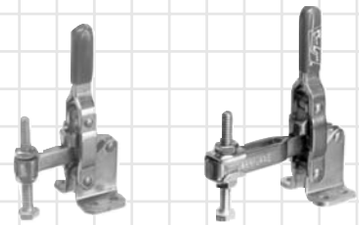

CL-250-VTC-S **CL-253-VTC-S**

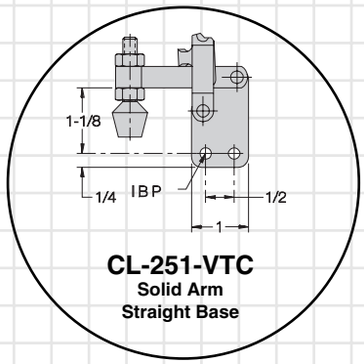

CL-251-VTC
Solid Arm
Straight Base

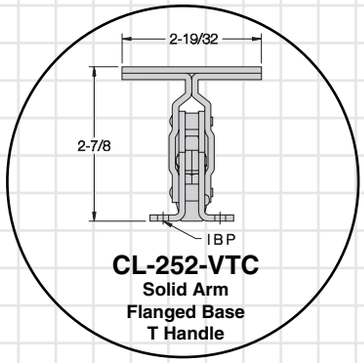

CL-252-VTC
Solid Arm
Flanged Base
T Handle

Also available air powered . . .

CL-500-PTC
(page 60)

MANUFACTURING CO.
4200 Carr Lane Ct., P.O. Box 191970
St. Louis, Missouri 63119-7970 USA
Phone: 314-647-6200, FAX: 314-647-5736
Web Site: www.carrlane.com

Allowances and Tolerances

- Informational Fits Chart

ALLOWANCES AND TOLERANCES

ANSI Standard Fits.—Tables 3 through 9 inclusive show a series of standard types and classes of fits on a unilateral hole basis, such that the fit produced by mating parts in anyone class will produce approximately similar performance throughout the range of sizes. These tables prescribe the fit for any given size, or type of fit; they also prescribe the standard limits for the mating parts that will produce the fit. The fits listed in these tables contain all those that appear in the approved American-British-Canadian proposal.

Selection of Fits: In selecting limits of size for any application, the type of fit is determined first, based on the use or service required from the equipment being designed; then the limits of size of the mating parts are established, to insure that the desired fit will be produced.

Theoretically, an infinite number of fits could be chosen, but the number of standard fits shown in the accompanying tables should cover most applications.

Designation of Standard Fits: Standard fits are designated by means of the following symbols, which, facilitate reference to classes of fit for educational purposes. The symbols are not intended to be shown on manufacturing drawings; instead, sizes should be specified on drawings.

The letter symbols used are as follows:

RC =Running or Sliding Clearance Fit
LC =Locational Clearance Fit
LT =Transition Clearance or Interference Fit
LN =Locational Interference Fit
FN =Force or Shrink Fit

These letter symbols are used in conjunction with numbers representing the class of fit; thus FN 4 represents a Class 4, force fit.

Each of these symbols (two letters and a number) represents a complete fit for which the minimum and maximum clearance or interference and the limits of size for the mating parts are given directly in the tables.

Description of Fits.—The classes of fits are arranged in three general groups: running and sliding fits, locational fits, and force fits.

Running and Sliding Fits (RC): Running and sliding fits, for which limits of clearance are given in Table 2, are intended to provide a similar running performance, with suitable lubrication allowance, throughout the range of sizes. The clearances for the first two classes, used chiefly as slide fits, increase more slowly with the diameter than for the other classes, so that accurate location is maintained even at the expense of free relative motion.

ALLOWANCES AND TOLERANCES

These fits may be described as follows:

RC 1 *Close sliding fits* are intended for the accurate location of parts that must assemble without perceptible play.

RC 2 *Sliding fits* are intended for accurate location, but with greater maximum clearance than class RC 1. Parts made to this fit move and turn easily but are not intended to run freely, and in the larger sizes may seize with small temperature changes.

RC 3 *Precision running fits* are about the closest fits that can be expected to run freely, and are intended for precision work at slow speeds and light journal pressures, but are not suitable where appreciable temperature differences are likely to be encountered.

RC 4 *Close running fits* are intended chiefly for running fits on accurate machinery with moderate surface speeds and journal pressures, where accurate location and minimum playare desired.

RC 5 and **RC 6** *Medium running fits* are intended for higher running speeds, or heavy journal pressures, or both.

RC 7 *Free running fits* are intended for use where accuracy is not essential, or where large temperature variations are likely to be encountered, or under both these conditions.

RC 8 and **RC 9** *Loose running fits* are intended for use where wide commercial tolerances may be necessary, together with an allowance, on the external member.

Locational Fits (LC, LT, and LN): Locational fits are fits intended to determine only the location of the mating parts; they may provide rigid or accurate location, as with interference fits, or provide some freedom of location, as with clearance fits. Accordingly, they are divided into three groups: clearance fits (LC), transition fits (LT), and interference fits (LN).

These are described as follows:

LC *Locational clearance fits* are intended for parts which are normally stationary, but that can be freely assembled or disassembled. They range from snug fits for parts requiring accuracy of location, through the medium clearance fits for parts such as spigots, to the looser fastener fits where freedom of assembly is of prime importance.

LT *Locational transition fits* are a compromise between clearance and interference fits, for applications where accuracy of location is important, but either a small amount of clearance or interference is permissible.

LN *Locational interference fits* are used where accuracy of location is of prime importance, and for parts requiring rigidity and alignment with no special requirements for bore pressure. Such fits are not intended for parts designed to transmit frictional loads from one part to another by virtue of the tightness of fit. These conditions are covered by force fits.

Force Fits: (FN): Force or shrink fits constitute a special type of interference fit, normally characterized by maintenance of constant bore pressures throughout the range of sizes. The interference therefore varies almost directly with diameter, and the difference between its minimum and maximum value is small, to maintain the resulting pressures within reasonable limits.

These fits are described as follows:

FN 1 *Light drive fits* are those requiring light assembly pressures, and produce more or less permanent assemblies. They are suitable for thin sections or long fits, or in cast-iron external members.

FN 2 *Medium drive fits* are suitable for ordinary steel parts, or for shrink fits on light sections.

They are about the tightest fits that can be used with high-grade cast-iron external members.

FN 3 *Heavy drive fits* are suitable for heavier steel parts or for shrink fits in medium sections.

FN 4 and **FN 5** *Force fits* are suitable for parts that can be highly stressed, or for shrink fits where the heavy pressing forces required are impractical.

Graphical Representation of Limits and Fits.—A visual comparison of the hole and shaft tolerances and the clearances or interferences provided by the various types and classes of fits can be obtained from the diagrams on page 633. These diagrams have been drawn to scale for a nominal diameter of 1 inch.

Use of Standard Fit Tables.—*Example 1:*A Class RC 1 fit is to be used in assembling a mating hole and shaft of 2-inch nominal diameter. This class of fit was selected because the application required accurate location of the parts with no perceptible play (see *Description of Fits*, RC 1 close sliding fits). From the data in Table 2, establish the limits of size and clearance of the hole and shaft.

Maximum hole = 2 + 0.0005 = 2.0005; minimum hole = 2 inches

Maximum shaft = 2 − 0.0004 = 1.9996; minimum shaft = 2 − 0.0007 = 1.9993 inches

Minimum clearance = 0.0004; maximum clearance = 0.0012 inch

Table 9. ANSI Standard Force and Shrink Fits *ANSI B4.1-1967 (R1987)*

Nominal Size Range, Inches		Class FN 1			Class FN 2			Class FN 3			Class FN 4			Class FN 5		
		Interference[a]	Standard Tolerance Limits		Interference[a]	Standard Tolerance Limits		Interference[a]	Standard Tolerance Limits		Interference[a]	Standard Tolerance Limits		Interference[a]	Standard Tolerance Limits	
			Hole H6	Shaft		Hole H7	Shaft s6		Hole H7	Shaft t6		Hole H7	Shaft u6		Hole H8	Shaft x7
Over	To	Values shown below are in thousandths of an inch														
0–	0.12	0.05	+0.25	+0.5	0.2	+0.4	+0.85				0.3	+0.4	+0.95	0.3	+0.6	+1.3
		0.5	0	+0.3	0.85	0	+0.6				0.95	0	+0.7	1.3	0	+0.9
0.12–	0.24	0.1	+0.3	+0.6	0.2	+0.5	+1.0				0.4	+0.5	+1.2	0.5	+0.7	+1.7
		0.6	0	+0.4	1.0	0	+0.7				1.2	0	+0.9	1.7	0	+1.2
0.24–	0.40	0.1	+0.4	+0.75	0.4	+0.6	+1.4				0.6	+0.6	+1.6	0.5	+0.9	+2.0
		0.75	0	+0.5	1.4	0	+1.0				1.6	0	+1.2	2.0	0	+1.4
0.40–	0.56	0.1	+0.4	+0.8	0.5	+0.7	+1.6				0.7	+0.7	+1.8	0.6	+1.0	+2.3
		0.8	0	+0.5	1.6	0	+1.2				1.8	0	+1.4	2.3	0	+1.6
0.56–	0.71	0.2	+0.4	+0.9	0.5	+0.7	+1.6				0.7	+0.7	+1.8	0.8	+1.0	+2.5
		0.9	0	+0.6	1.6	0	+1.2				1.8	0	+1.4	2.5	0	+1.8
0.71–	0.95	0.2	+0.5	+1.1	0.6	+0.8	+1.9				0.8	+0.8	+2.1	1.0	+1.2	+3.0
		1.1	0	+0.7	1.9	0	+1.4				2.1	0	+1.6	3.0	0	+2.2
0.95–	1.19	0.3	+0.5	+1.2	0.6	+0.8	+1.9	0.8	+0.8	+2.1	+1.0	+0.8	+2.3	1.3	+1.2	+3.3
		1.2	0	+0.8	1.9	0	+1.4	2.1	0	+1.6	2.3	0	+1.8	3.3	0	+2.5
1.19–	1.58	0.3	+0.6	+1.3	0.8	+1.0	+2.4	1.0	+1.0	+2.6	1.5	+1.0	+3.1	1.4	+1.6	+4.0
		1.3	0	+0.9	2.4	0	+1.8	2.6	0	+2.0	3.1	0	+2.5	4.0	0	+3.0
1.58–	1.97	0.4	+0.6	+1.4	0.8	+1.0	+2.4	1.2	+1.0	+2.8	1.8	+1.0	+3.4	2.4	+1.6	+5.0
		1.4	0	+1.0	2.4	0	+1.8	2.8	0	+2.2	3.4	0	+2.8	5.0	0	+4.0
1.97–	2.56	0.6	+0.7	+1.8	0.8	+1.2	+2.7	1.3	+1.2	+3.2	2.3	+1.2	+4.2	3.2	+1.8	+6.2
		1.8	0	+1.3	2.7	0	+2.0	3.2	0	+2.5	4.2	0	+3.5	6.2	0	+5.0
2.56–	3.15	0.7	+0.7	+1.9	1.0	+1.2	+2.9	1.8	+1.2	+3.7	2.8	+1.2	+4.7	4.2	+1.8	+7.2
		1.9	0	+1.4	2.9	0	+2.2	3.7	0	+3.0	4.7	0	+4.0	7.2	0	+6.0
3.15–	3.94	0.9	+0.9	+2.4	1.4	+1.4	+3.7	2.1	+1.4	+4.4	3.6	+1.4	+5.9	4.8	+2.2	+8.4
		2.4	0	+1.8	3.7	0	+2.8	4.4	0	+3.5	5.9	0	+5.0	8.4	0	+7.0
3.94–	4.73	1.1	+0.9	+2.6	1.6	+1.4	+3.9	2.6	+1.4	+4.9	4.6	+1.4	+6.9	5.8	+2.2	+9.4
		2.6	0	+2.0	3.9	0	+3.0	4.9	0	+4.0	6.9	0	+6.0	9.4	0	+8.0